LIGHTING

L1	F	4X18W, FLUORESCENT LIGHTING UNIT, WITH DOUBLE PARABOLIC REFLECTOR
L2		2X58W, 1.5M LENGTH FLUORESCENT LIGHTING UNIT WITH REFLECTOR
L3		2X36W, FLUORESCENT LIGHTING UNIT, 1.2M LENGTTH
L4		2x40W, FLUORESCENT LIGHTING UNIT, WITH DIFFUSER
L5		60W RECESSED CEILING SPOT LIGHT
L6		60W CEILING GLOBE
L7		12M HIGH STREET LIGHTING POLE WITH 150W HPS, IP54 STREET LIGHTING UNIT
L8		150W HPS, IP54 WALL MOUNTED STREET LIGHTING UNIT WITH ARM

SWITCHES

	10A, ONE GANG, ONE WAY SWITCH
	10A, TWO GANGS, ONE WAY SWITCH
	10A, ONE GANG, TWO WAY SWITCH
	20A, DOUBLE POLE SWITCH WITH INDICATING LAMP

EMERGENCY LIGHT

E1	E	NON MAINTAINED 2X8W EMERGENCY LIGHTING UNIT
E2	EXIT	1X8W MAINTAINED EMERGENCY LIGHTING UNIT, WITH EXIT SIGN

LIGHTNING

	AERIAL

POWER

nAT/mAF	SINGLE PHASE MCCB, n DENOTES THE TRIP RATING, m DENOTES THE FRAME RATING
MMPR	MOTOR MONITORING & PROTECTION RELAY
HS	EMERGENCY PUSH BUTTON
	OIL CIRCUIT BREAKER
PFCC	POWER FACTOR CORRECTION CAPACITOR
SS	SOFT STARTER
K	ELECTRICAL AND MECHANICAL INTER LOCK
	VACUUM CIRCUIT BREAKER
	CONTACTOR
ON	START PUSH BUTTON
OFF	STOP BUSH BUTTON
	EXHAUST FAN (MECHANICAL EQUIPMENT)
	A/C SPLIT UNIT (MECHANICAL EQUIPMENT)

LOW CURRENT

∇_1	RJ11 TELEPHONE OUTLET
∇_2	RJ11 AND RJ45 TELEPHONE AND NETWORK OUTLETS
TC	TELEPHONE CONNECTION BOX
	SMOKE DETECTOR
	HEAT DETECTOR
	MANUAL FIRE ALARM STATION (BREAK GLASS)
	FIRE ALARM HORN

POWER

	13A, SOCKET OUTLET
	13A, DUPLEX SOCKET OUTLET
	16A, 3PHASE INDUSTRIAL OUTLET
	32A, 3PHASE INDUSTRIAL OUTLET
nA	IP54, THREE PHASE KNIFE SWITCH ISOLATOR, n DENOTES THE AMPERE RATING
nA	IP54, SINGLE PHASE KNIFE SWITCH ISOLATOR, n DENOTES THE AMPERE RATING
	POWER DISTRIBUTION BOARD
nAT mAF	THREE PHASE MCCB, n DENOTES THE TRIP RATING, m DENOTES THE FRAME RATING

ABBREVIATIONS

DB	DISTRIBUTION BOARD
SMDB	SUB MAIN DISTRIBUTION BOARD
SO	SOCKET OUTLET
MCCB	MOULDED CASE CIRCUIT BREAKER
MCB	MINIATURE CIRCUIT BREAKER
ACB	AIR CIRCUIT BREAKER
RTU	REMOTE TRANSMISSION UNIT
LIT	LEVEL INDICATOR TRANSMITTER
FIT	FLOW INDICATOR TRANSMITTER
EM	ELECTROMAGNATIC FLOW METER
US	ULTRASONIC WATER LEVEL METER
VCB	VACUUM CIRCUIT BREAKER
RGS	RIGID GALVANIZED STEEL CONDUIT
TVMS	TEMPERATORE VIBRATION MONITORING SYSTEM
HH	HAND HOLE

REDUCED SIZE DRAWINGS

REV.	DATE	DRAWN	CHKD	REMARKS

DESIGNED:	CHECKED:	SCALE:
M.Fr.	S.F.	NTS
DRAWN:	APPROVED:	DATE:
M.F.	L.P.	NOV. 2005

CDM International Inc.

NORTHERN GOVERNORATES WATER TRANSMISSION
Eastern Primary Transmission System

ELECTRICAL LEGEND AND ABBREVIATIONS

PROJECT NO. : 3029-42324

DRAWING NO. : E-1

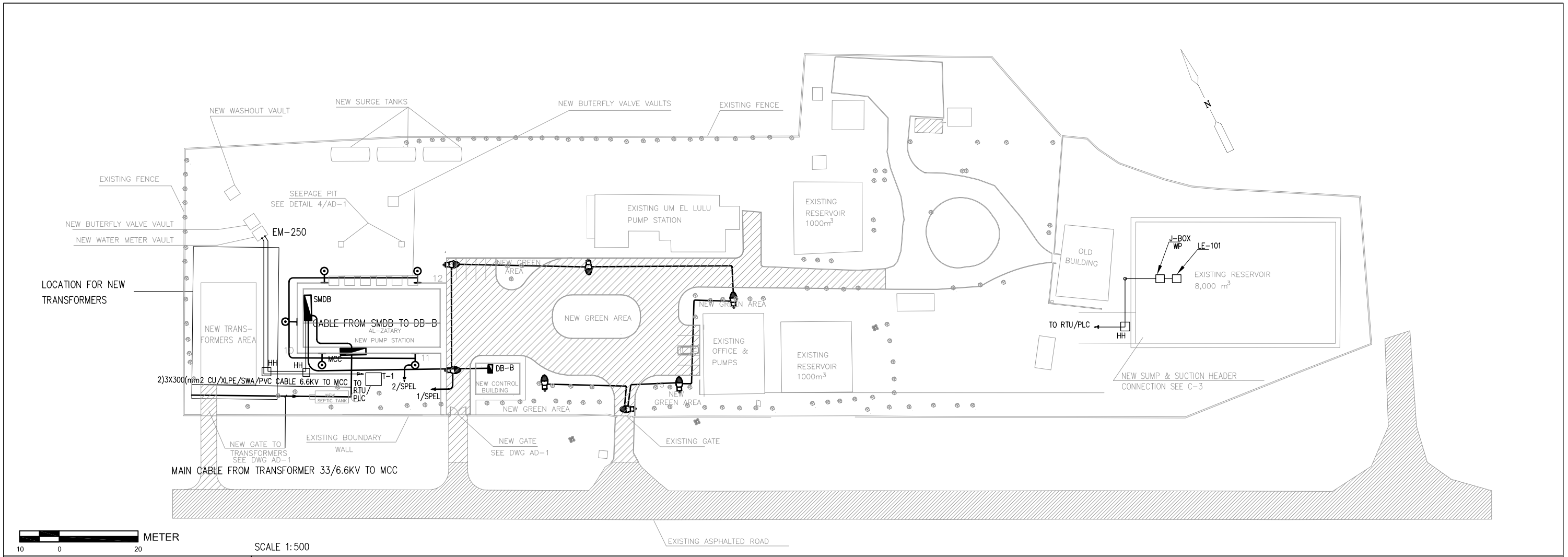

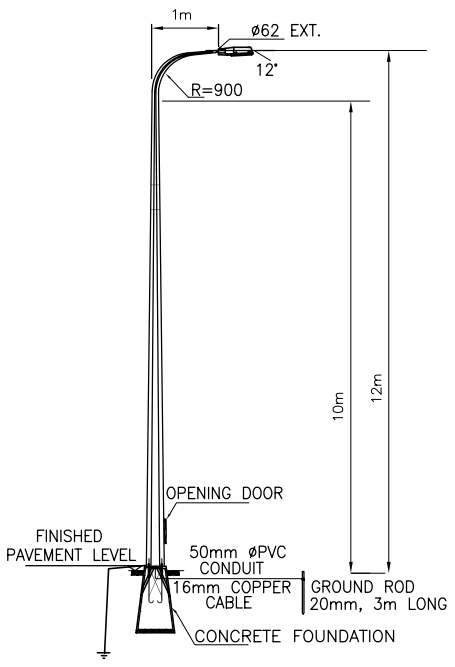

12m HIGH LIGHTING POLE DETAIL
NTS

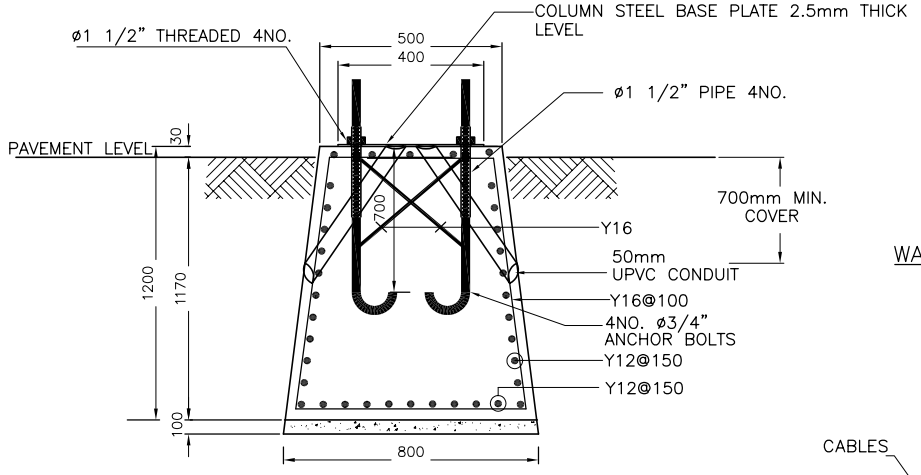

STREET LIGHTING BASE DETAIL
NTS

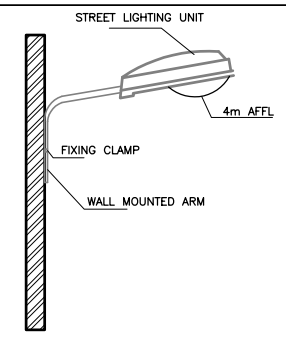

WALL MOUNTED STREET LIGHTING UNIT WITH ARM
NTS

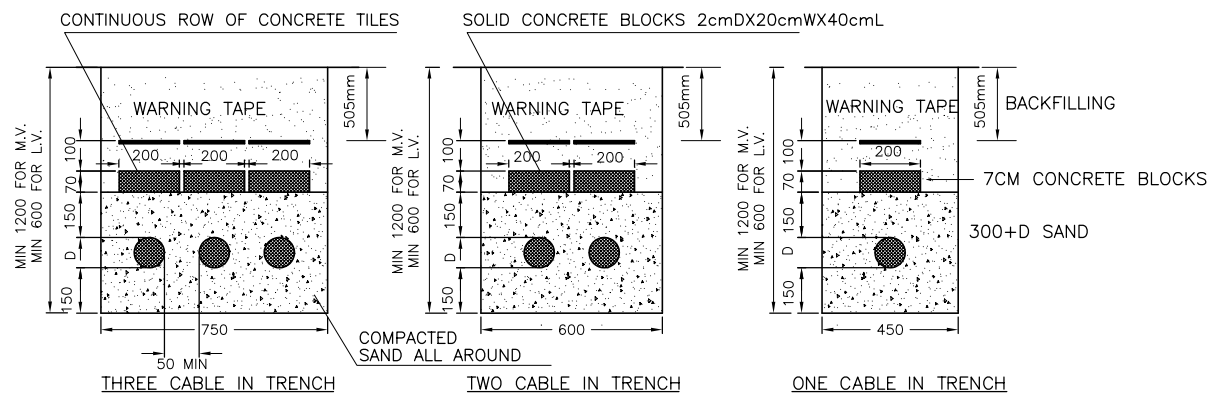

THREE CABLE IN TRENCH
TWO CABLE IN TRENCH
ONE CABLE IN TRENCH

DIRECT BURRIED CABLES BURRIED CABLES IN NATURAL GROUND
NTS

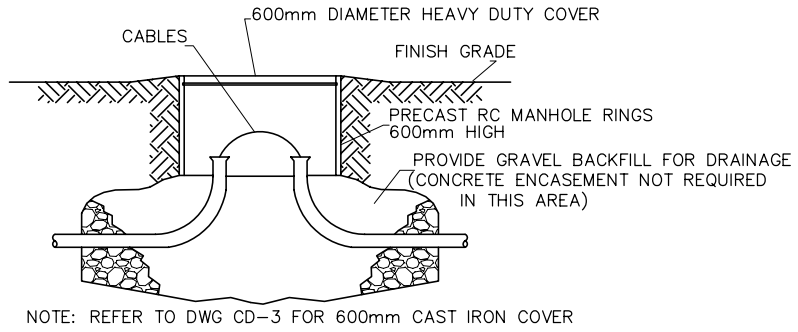

NOTE: REFER TO DWG CD-3 FOR 600mm CAST IRON COVER

TYPICAL HANDHOLE INSTALLATION
NTS

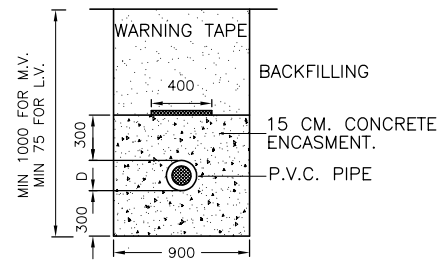

ONE CABLE IN TRENCH
CABLE CROSSES ASPHALT ROADS
NTS

REDUCED SIZE DRAWINGS

M.V. : MEDIUM VOLTAGE
L.V. : LOW VOLTAGE

REV.	DATE	DRAWN	CHKD	REMARKS

DESIGNED:	CHECKED:	SCALE:
M.Fr.	S.F.	AS SHOWN
DRAWN:	APPROVED:	DATE:
M.F.	L.P.	NOV. 2005

CDM
CDM International Inc.

NORTHERN GOVERNORATES WATER TRANSMISSION
Eastern Primary Transmission System

SITE CABLING AND LIGHTING

PROJECT NO. : 3029-42324

DRAWING NO. : E-2

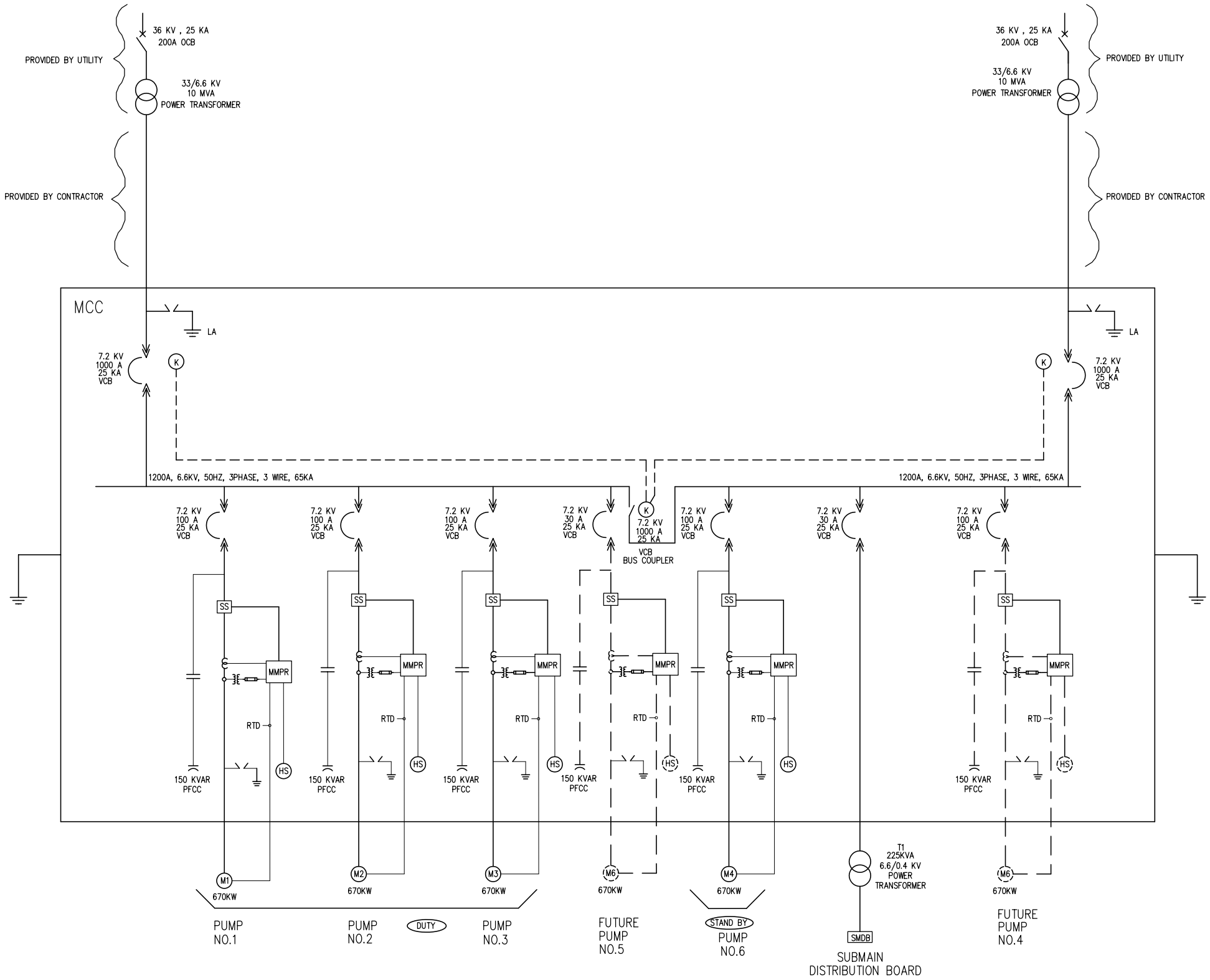

NOTE:

POWER FACTOR CORRECTION CAPACITORS SHOULD BE CAPABLE TO IMPROVE THE POWER FACTOR BETTER THAN 0.95, THE CONTRACTOR IS RESPONSIBLE TO PROVIDE MULTI STAGE PFCC WITH SUITABLE SIZE BASED ON THE SUPPLIED MOTOR POWER FACTOR AND THE TARGET POWER FACTOR.

REDUCED SIZE DRAWINGS

MOTOR CONTROL CENTER (MCC)

REV.	DATE	DRAWN	CHKD	REMARKS

DESIGNED:	CHECKED:	SCALE:
M.Fr.	S.F.	NTS
DRAWN:	APPROVED:	DATE:
M.F.	L.P.	NOV. 2005

CDM International Inc.

NORTHERN GOVERNORATES WATER TRANSMISSION
Eastern Primary Transmission System

SINGLE LINE DIAGRAM

PROJECT NO. : 3029-42324

DRAWING NO. : E-3

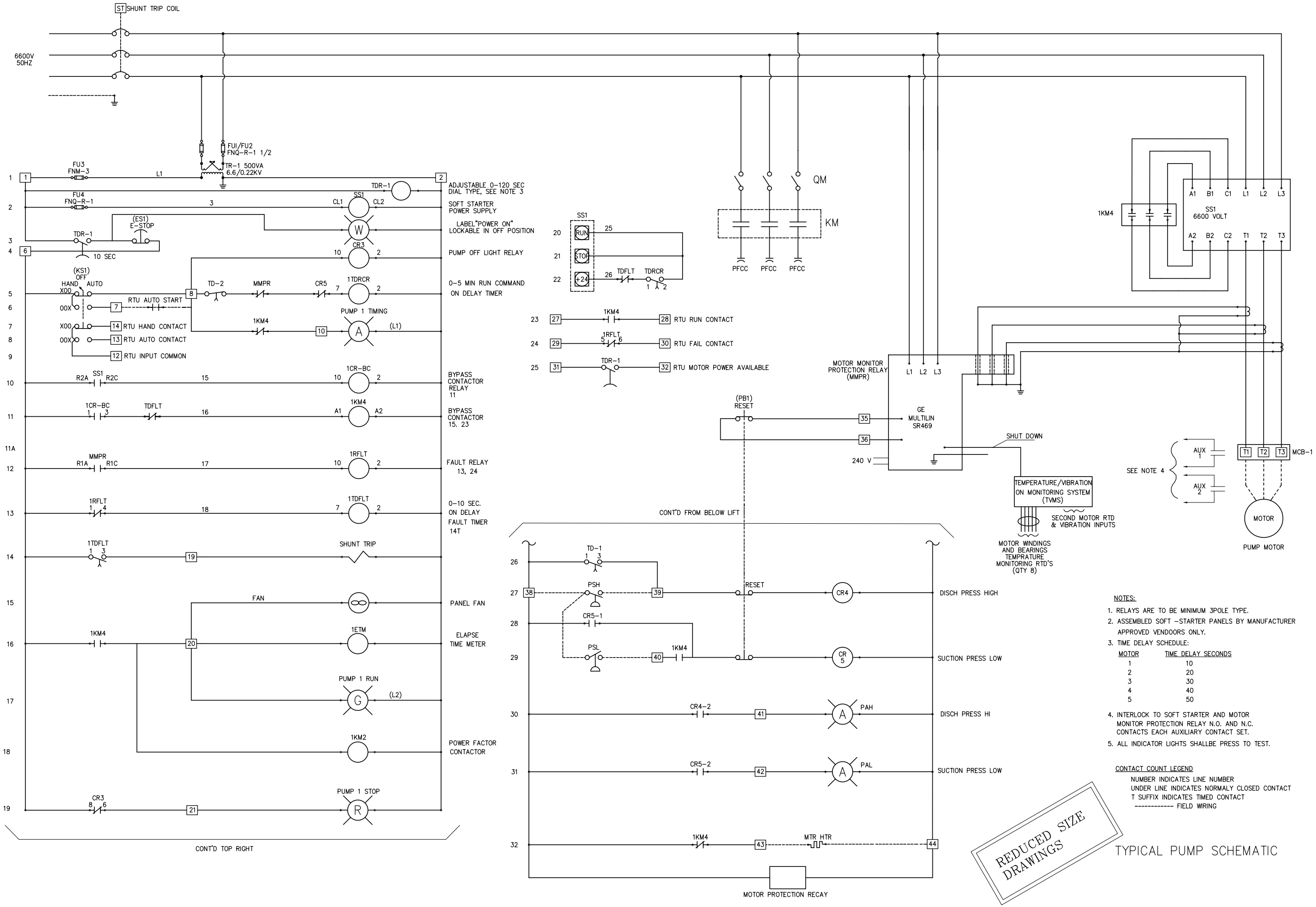

NOTES:

1. RELAYS ARE TO BE MINIMUM 3POLE TYPE.
2. ASSEMBLED SOFT -STARTER PANELS BY MANUFACTURER APPROVED VENDOORS ONLY.
3. TIME DELAY SCHEDULE:

MOTOR	TIME DELAY SECONDS
1	10
2	20
3	30
4	40
5	50

4. INTERLOCK TO SOFT STARTER AND MOTOR MONITOR PROTECTION RELAY N.O. AND N.C. CONTACTS EACH AUXILIARY CONTACT SET.
5. ALL INDICATOR LIGHTS SHALLBE PRESS TO TEST.

CONTACT COUNT LEGEND

NUMBER INDICATES LINE NUMBER
UNDER LINE INDICATES NORMALY CLOSED CONTACT
T SUFFIX INDICATES TIMED CONTACT
---------- FIELD WIRING

REDUCED SIZE DRAWINGS

TYPICAL PUMP SCHEMATIC

REV.	DATE	DRAWN	CHKD	REMARKS

DESIGNED:	CHECKED:	SCALE:
M.Fr.	S.F.	NTS
DRAWN:	APPROVED:	DATE:
M.F.	L.P.	NOV. 2005

CDM International Inc.

NORTHERN GOVERNORATES WATER TRANSMISSION
Eastern Primary Transmission System

THREE LINE & CONTROL SCHEMATICS

PROJECT NO. : 3029-42324

DRAWING NO. : E-4

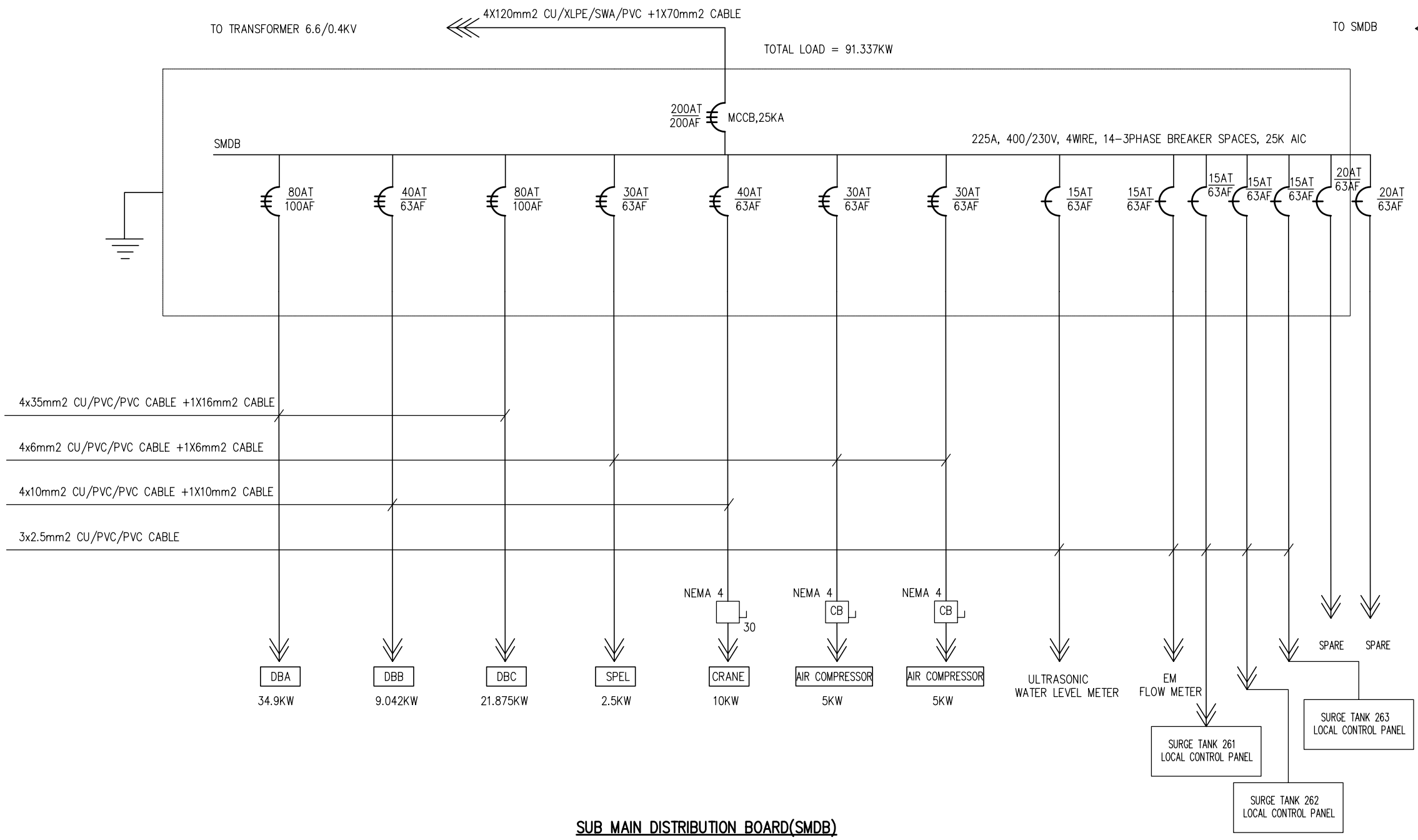

SUB MAIN DISTRIBUTION BOARD(SMDB)

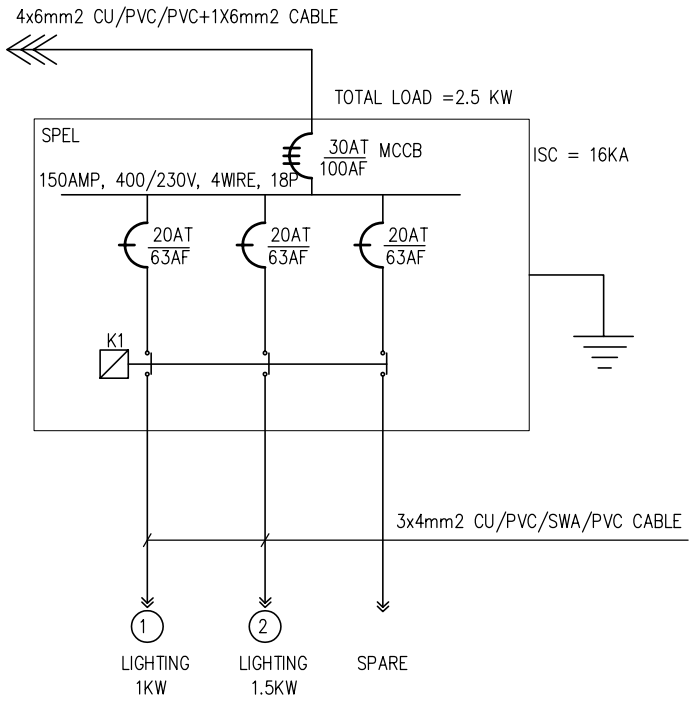

EXTERNAL LIGHTING PANEL (SPEL)

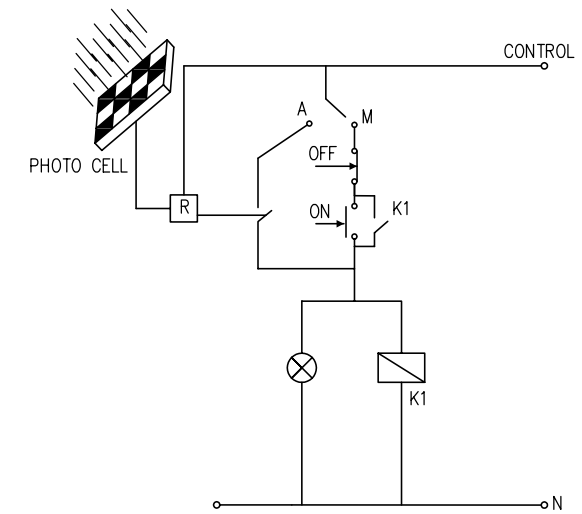

CONTROL CIRCUIT FOR EXTERNAL LIGHTING

REDUCED SIZE DRAWINGS

REV.	DATE	DRAWN	CHKD	REMARKS

DESIGNED:	CHECKED:	SCALE:
M.Fr.	S.F.	NTS
DRAWN:	APPROVED:	DATE:
M.F.	L.P.	NOV. 2005

CDM
CDM International Inc.

NORTHERN GOVERNORATES WATER TRANSMISSION
Eastern Primary Transmission System

SMDB DIAGRAM

PROJECT NO. : 3029-42324

DRAWING NO. : E-5