## DISTRIBUTION PANEL BOARD

| BUILDING: | PUMP HOUSE | LOCATION: | ELECTRIC ROOM | PANEL REF: | **DBA** |
|---|---|---|---|---|---|
| VOLTAGE & FREQ.: 150A, 400/230V, 3PHASE, 50HZ, 10KAIC | | | | CABLE SIZE | 4X35mm2 CU/PVC/PVC CABLE+1X16mm2 CABLE |
| | | | | MAIN SUPPLY FROM: | SMDB |

| Designation Load | wire size mm2 | Phase Load In W | | | Trip Rating | | | | | | | Phase Load In W | | | wire size mm2 | Designation Load |
|---|---|---|---|---|---|---|---|---|---|---|---|---|---|---|---|---|
| | | R | Y | B | CT NO | CB (A) | R | Y | B | CB (A) | CT NO | R | Y | B | | |
| LIGHTING | 2.5 | 800 | | | 1 | 10 | | | | 10 | 2 | 800 | | | 2.5 | LIGHTING |
| LIGHTING | 2.5 | | 1000 | | 3 | 10 | | | | 10 | 4 | | 1100 | | 2.5 | LIGHTING |
| LIGHTING | 2.5 | | | 750 | 5 | 10 | | | | 10 | 6 | | | 750 | 2.5 | LIGHTING |
| S.OUTLET | 2.5 | 750 | | | 7 | 15 | | | | 15 | 8 | 500 | | | 2.5 | S.OUTLET |
| S.OUTLET | 2.5 | | 750 | | 9 | 15 | | | | 15 | 10 | | 750 | | 2.5 | S.OUTLET |
| S.OUTLET | 2.5 | | | 750 | 11 | 15 | | | | 15 | 12 | | | 500 | 2.5 | S.OUTLET |
| S.OUTLET | 6 | 2000 | | | 13 | 30 | | | | 30 | 14 | 1750 | | | 6 | S.OUTLET |
| | | | 2000 | | 15 | | | | | | 16 | | 1750 | | | |
| | | | | 2000 | 17 | | | | | | 18 | | | 1750 | | |
| S.OUTLET | 10 | 3500 | | | 19 | 40 | | | | 20 | 20 | 1000 | | | 4 | S.OUTLET |
| | | | 3500 | | 21 | | | | | | 22 | | 1000 | | | |
| | | | | 3500 | 23 | | | | | | 24 | | | 1000 | | |
| S.OUTLET | 6 | 1750 | | | 25 | 30 | | | | 20 | 26 | 1000 | | | 4 | S.OUTLET |
| | | | 1750 | | 27 | | | | | | 28 | | 1000 | | | |
| | | | | 1750 | 29 | | | | | | 30 | | | 1000 | | |
| LIGHTING | 2.5 | 250 | | | 31 | 10 | | | | 10 | 32 | 250 | | | 2.5 | LIGHTING |
| E.W.H | 4 | | 1250 | | 33 | 20 | | | | 15 | 34 | | 600 | | | ELEC,RM OUTLET |
| SPARE | | | | | 35 | 15 | | | | 15 | 36 | | | | | SPARE |
| SPACE | | – | – | – | 37 | – | | | | – | 38 | – | – | – | – | SPACE |
| SPACE | | – | – | – | 39 | – | | | | – | 40 | – | – | – | – | SPACE |
| SPACE | | – | – | – | 41 | – | | | | – | 42 | – | – | – | – | SPACE |
| Subtotal | | 9050 | 10250 | 8750 | | | | | | | | 5300 | 5600 | 5000 | | |
| | | | | | | | | | | 100A , MCB | | | | | | |

| Total Connected W | 14350 | 14600 | 13750 | | | Lighting | Socket Outlet | MISC | TOTAL |
|---|---|---|---|---|---|---|---|---|---|
| CONNECTED LOAD W | 43950 | | | Connected W | R | 2100 | 8750 | 3500 | 14350 |
| | | | | | Y | 2100 | 1500 | 12250 | 15850 |
| DEMAND LOAD W | 32663 | | | | B | 1500 | 1250 | 11000 | 13750 |
| | | | | DEM FACT | | 1 | 0.6 | 0.75 | |
| 10% FUTURE LOAD W | 3267 | | | Demand W | R | 2100 | 5250 | 2625 | 9975 |
| | | | | | Y | 2100 | 900 | 9187 | 11250 |
| PANEL LOAD KW | 35930 | | | | B | 1500 | 750 | 8250 | 10500 |

## THREE PASE DISTRIBUTION PANEL BOARD

| BUILDING: | CONTROL BUILDING | LOCATION: | CONTROL BUILDING | PANEL REF: | **DBB** |
|---|---|---|---|---|---|
| VOLTAGE & FREQ.: 150A, 400/230V, 3PHASE, 50HZ, 10KAIC | | | | CABLE SIZE | 4X10mm2 CU/PVC/PVC CABLE+1X10mm2CABLE |
| | | | | MAIN SUPPLY FROM: | SMDB |

| Designation Load | wire size mm2 | Phase Load In W | | | Trip Rating | | | | | | Phase Load In W | | | wire size mm2 | Designation Load |
|---|---|---|---|---|---|---|---|---|---|---|---|---|---|---|---|
| | | R | Y | B | CT NO | CB (A) | R | Y | B | CB (A) | CT NO | R | Y | Z | | |
| LIGHTING | 2.5 | 600 | | | 1 | 10 | | | | 10 | 2 | 600 | | | 2.5 | LIGHTING |
| LIGHTING | 2.5 | | 600 | | 3 | 10 | | | | 15 | 4 | | 600 | | 2.5 | S.OUTLET |
| S.OUTLET | 2.5 | | | 600 | 5 | 15 | | | | 20 | 6 | | | 1500 | 4 | S.OUTLET |
| S.OUTLET | 2.5 | 800 | | | 7 | 15 | | | | 15 | 8 | 1250 | | | 2.5 | S.OUTLET |
| E.W.H | 4.0 | | 1200 | | 9 | 20 | | | | 30 | 10 | | 2200 | | 6.0 | SPLIT UNIT |
| SPLIT UNIT | 6.0 | | | 2200 | 11 | 30 | | | | 15 | 12 | | | 600 | 4 | S.OUTLET |
| S.OUTLET | 4.0 | 600 | – | – | 13 | 15 | | | | 15 | 14 | 600 | – | – | 4 | S.OUTLET |
| S.OUTLET | 4.0 | – | 600 | – | 15 | 15 | | | | 15 | 16 | – | – | 600 | – | SPARE |
| SPARE | – | – | – | – | 17 | 15 | | | | 15 | 18 | – | – | – | – | SPARE |
| SPACE | | | | | 19 | | | | | | 20 | | | | | SPACE |
| SPACE | | | | | 21 | | | | | | 22 | | | | | SPACE |
| SPACE | | | | | 23 | | | | | | 24 | | | | | SPACE |
| Subtotal | | 2000 | 2000 | 2000 | | | | | | | | 2450 | 2800 | 2100 | | |
| | | | | | | | | | | 40A,MCB | | | | | | |

| Total Connected W | 4450 | 5200 | 4900 | | | Lighting | Socket Outlet | MISC | TOTAL |
|---|---|---|---|---|---|---|---|---|---|
| CONNECTED LOAD W | 14540 | | | Connected W | R | 1200 | 2050 | 0 | 3250 |
| | | | | | Y | 600 | 800 | 3400 | 4800 |
| DEMAND LOAD W | 8220 | | | | B | 0 | 2700 | 2200 | 4900 |
| | | | | DEM FACT | | 1 | 0.4 | 0.75 | |
| 10% FUTURE LOAD W | 822 | | | Demand W | R | 1200 | 820 | 0 | 2020 |
| | | | | | Y | 600 | 320 | 2550 | 3470 |
| PANEL LOAD KW | 9.042 | | | | B | 0 | 1080 | 1650 | 2730 |

REDUCED SIZE DRAWINGS

| REV. | DATE | DRAWN | CHKD | REMARKS |
|---|---|---|---|---|

| DESIGNED: | CHECKED: | SCALE: |
|---|---|---|
| M.Fr. | S.F. | NTS |
| DRAWN: | APPROVED: | DATE: |
| M.F. | L.P. | NOV. 2005 |

CDM International Inc.

NORTHERN GOVERNORATES WATER TRANSMISSION
Eastern Primary Transmission System

**ELECTRICAL PANELS**

PROJECT NO. : 3029-42324

DRAWING NO. : **E-6**

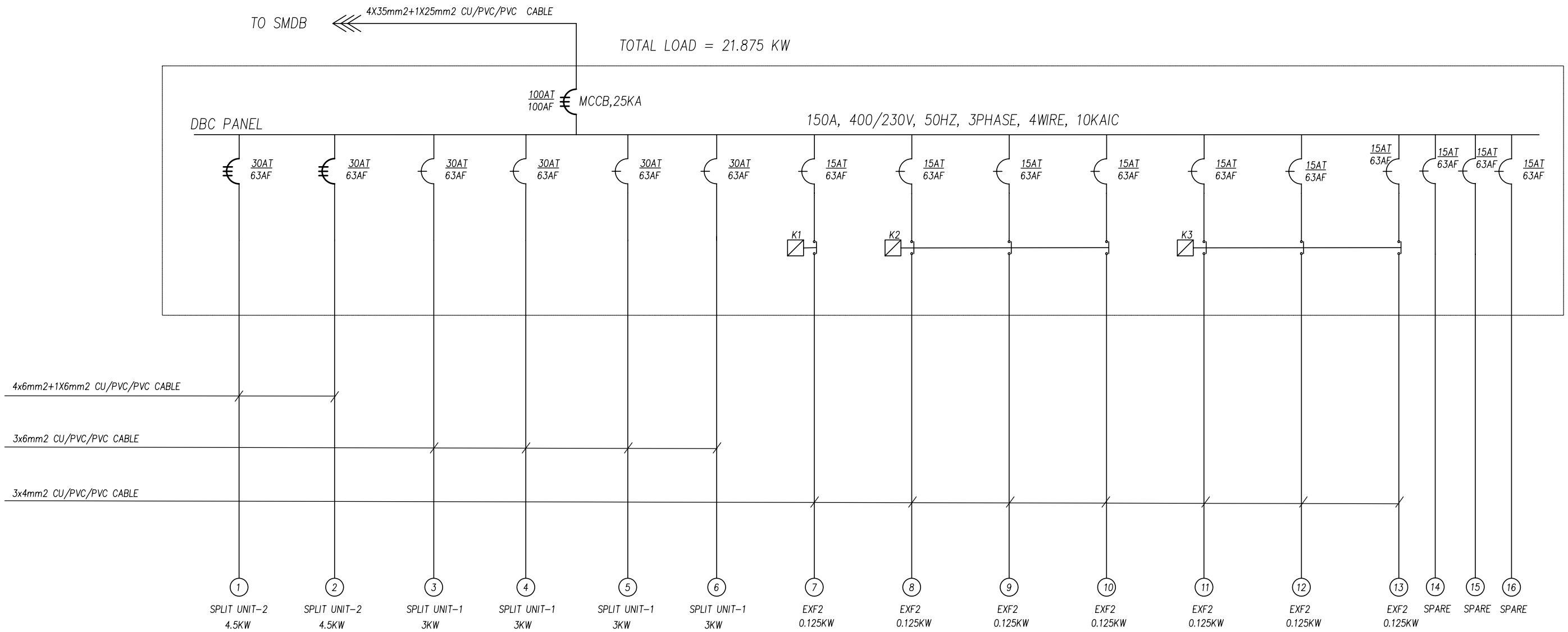


**DBC LOCATED IN PUMP BUILDING**

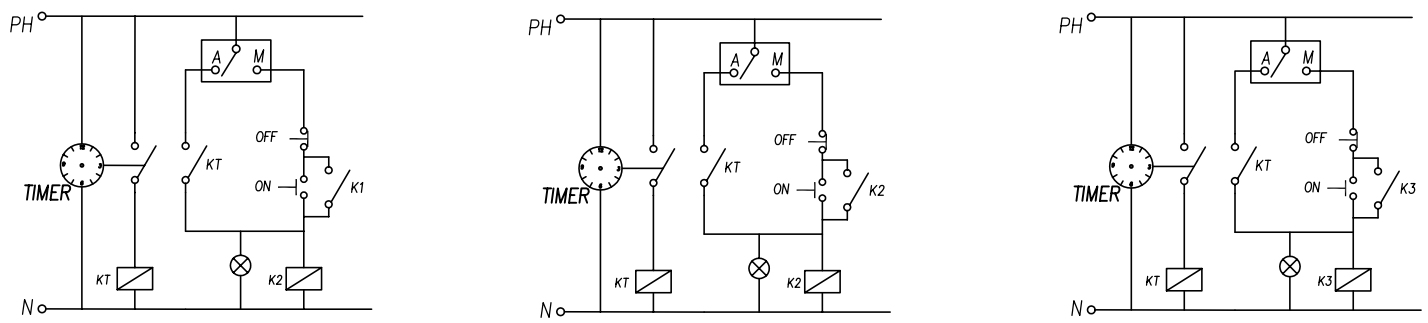


**CONTROL CIRCUITS FOR DBC PANEL**

CONTACTOR-RATING

K1- 20A, 230V, 2POLE, HP RATED(AC3)

K2- 400V, 3POLE, HP RATED(AC3)

K3- 20A, 400V, 3POLE, HP RATED(AC3)

REDUCED SIZE DRAWINGS

| REV. | DATE | DRAWN | CHKD | REMARKS | DESIGNED: M.Fr. | CHECKED: S.F. | SCALE: NTS | CDM International Inc. | NORTHERN GOVERNORATES WATER TRANSMISSION<br>Eastern Primary Transmission System | PROJECT NO.: 3029-42324 |
|---|---|---|---|---|---|---|---|---|---|---|
| | | | | | DRAWN: M.F. | APPROVED: L.P. | DATE: NOV. 2005 | | DBC PANEL | DRAWING NO.: E-7 |

| | | | |
|---|---|---|---|
| | 1– CABLE FROM 33/6.6 KV POWER TRANSFORMER TO MCC | 4(3X240mm2) CU/XLPE/SWA /PVC CABLE 11,000KV | DIRECT BURY & CONCRETE TRENCH CABLE SPACING AT 0.6m |
| | 2– CABLE FROM MCC TO PUMP | 3X50mm2 CU/XLPE/SWA /PVC CABLE 11,000KV + 1X35 mm2 GROUND | IN 100mm UPVC CONDUIT |
| | 3– CABLE FROM MCC TO 6.6/0.4KV POWER TRANSFORMER | 3X35mm2 CU/XLPE/SWA /PVC CABLE 11000KV | DIRECT BURY CONCRETE TRENCH IN FLOOR |
| | 1– CABLE FROM SMDB TO DBA | 4X35mm2 CU/PVC/PVC CABLE + 1X16mm2 CABLE | IN 50mm RGS CONDUIT |
| | 2– CABLE FROM SMDB TO DBB | 4X10mm2 CU/PVC/SWA/PVC CABLE + 1X10mm2 CABLE | IN TRENCH & 38mm PVC CONDUIT, RGS RISERS |
| | 3–CABLE FROM SMDB TO DBC | 4X35mm2 CU/PVC/PVC CABLE + 1X25mm2 CABLE | IN 50mm RGS CONDUIT OVERHEAD |
| | 4– CABLE FROM SMDB TO SPEL | 4X6mm2 CU/PVC/PVC CABLE + 1X6mm2 CABLE | IN 38mm RGS CONDUIT OVERHEAD |
| | 5– CABLE FROM SMDB TO CRANE | 4X10mm2 CU/PVC/PVC CABLE +1X10mm2 CABLE | IN 38mm RGS CONDUIT OVERHEAD |
| | 6– CABLE FROM SMDB TO AIR COMPRESSOR | 4X6mm2 CU/PVC/PVC CABLE + 1X6mm2 CABLE | IN 38mm PVC CONDUIT |
| | 7– CABLE FROM SMDB TO AIR COMPRESSOR | 4X6mm2 CU/PVC/PVC CABLE + 1X6mm2 CABLE | IN 38mm PVC CONDUIT |
| | 8– CABLE FROM SMDB TO EM FLOW METER | 3X2.5mm2 CU/PVC/PVC CABLE | IN 25mm PVC CONDUIT UNDERGROUND |
| | 9– CABLE FROM SMDB TO ULTRASONIC LEVEL METER | 3X2.5mm2 CU/PVC/PVC CABLE | IN 25mm PVC CONDUIT |
| | CABLE FROM SPEL TO STREET LIGHTING UNITS | 3X4mm2 CU/PVC/SWA/PVC CABLE | DIRECT BURIED |
| | 1– CABLE FROM T–1 225KVA TRANSFORMER TO MDB | 4X150mm2 CU/PVC/ARMORED/PVC CABLE, 600V + 1X95 mm2 CABLE | DIRECT BURIED & CONCRETE TRENCH & IN 100 mm RGS CONDUIT |

REDUCED SIZE DRAWINGS

| REV. | DATE | DRAWN | CHKD | REMARKS |
|---|---|---|---|---|

| DESIGNED: | CHECKED: | SCALE: |
|---|---|---|
| M.Fr. | S.F. | NTS |
| DRAWN: | APPROVED: | DATE: |
| M.F. | L.P. | NOV. 2005 |

CDM International Inc.

NORTHERN GOVERNORATES WATER TRANSMISSION
Eastern Primary Transmission System

**CABLES SCHEDULE**

PROJECT NO. : 3029-42324

DRAWING NO. : **E-8**

NOTES:

1. LOCATE EACH ROW OF FIXTURES 305mm FROM MCC FACE TOWARD CENTER OF ROOM.
2. LOCATE FIXTURES HALF WAY BETWEEN BACK OF MCC AND THE WALL.

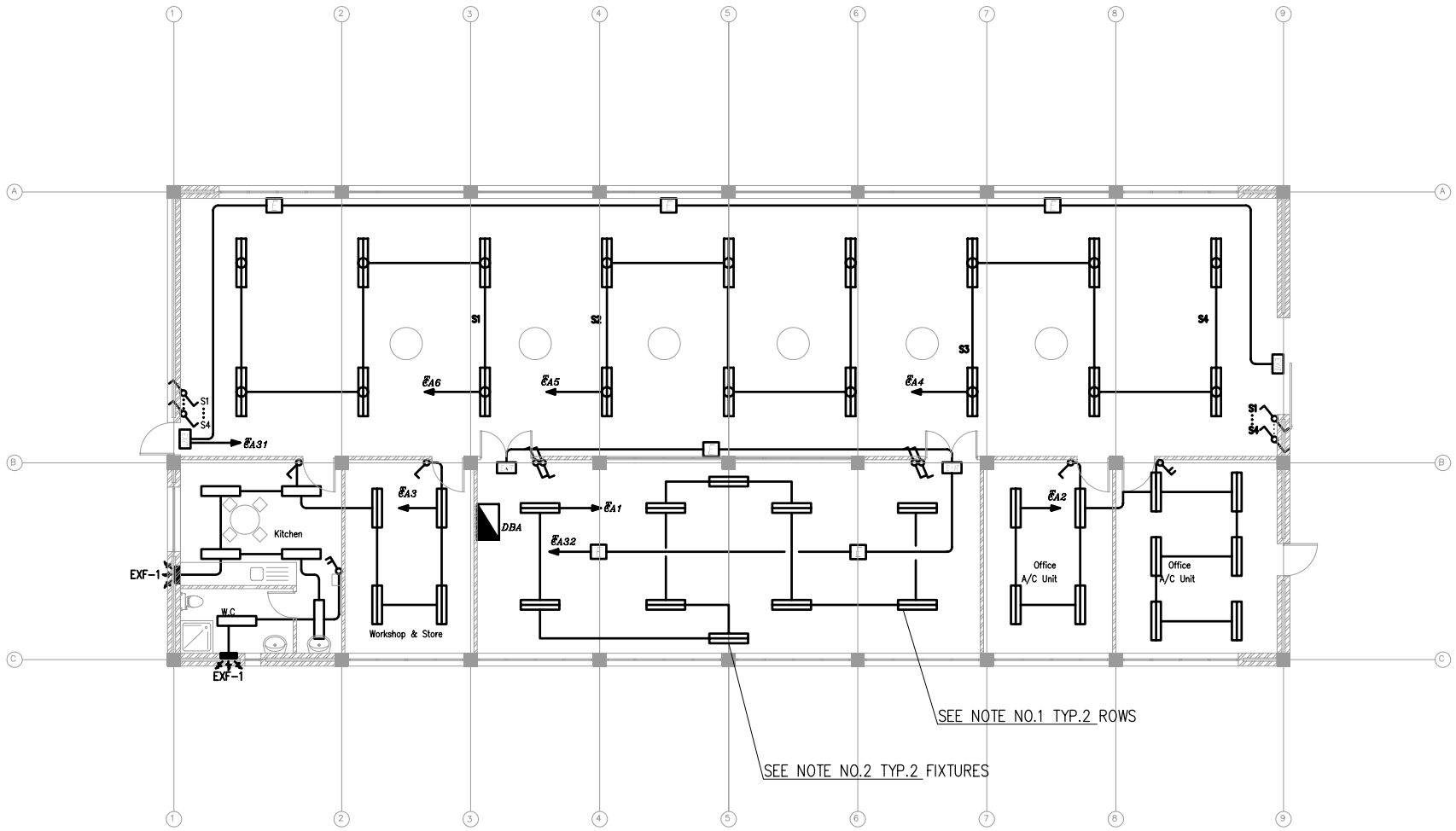


PUMP BUILDING LIGHTING

REDUCED SIZE DRAWINGS

| REV. | DATE | DRAWN | CHKD | REMARKS |
|---|---|---|---|---|

| DESIGNED: | CHECKED: | SCALE: |
|---|---|---|
| M.Fr. | S.F. | 1:100 |
| DRAWN: | APPROVED: | DATE: |
| M.F. | S.F. | NOV. 2005 |

CDM
CDM International Inc.

NORTHERN GOVERNORATES WATER TRANSMISSION
Eastern Primary Transmission System

PUMP BUILDING LIGHTING

PROJECT NO. : 3029-42324

DRAWING NO. : E-9

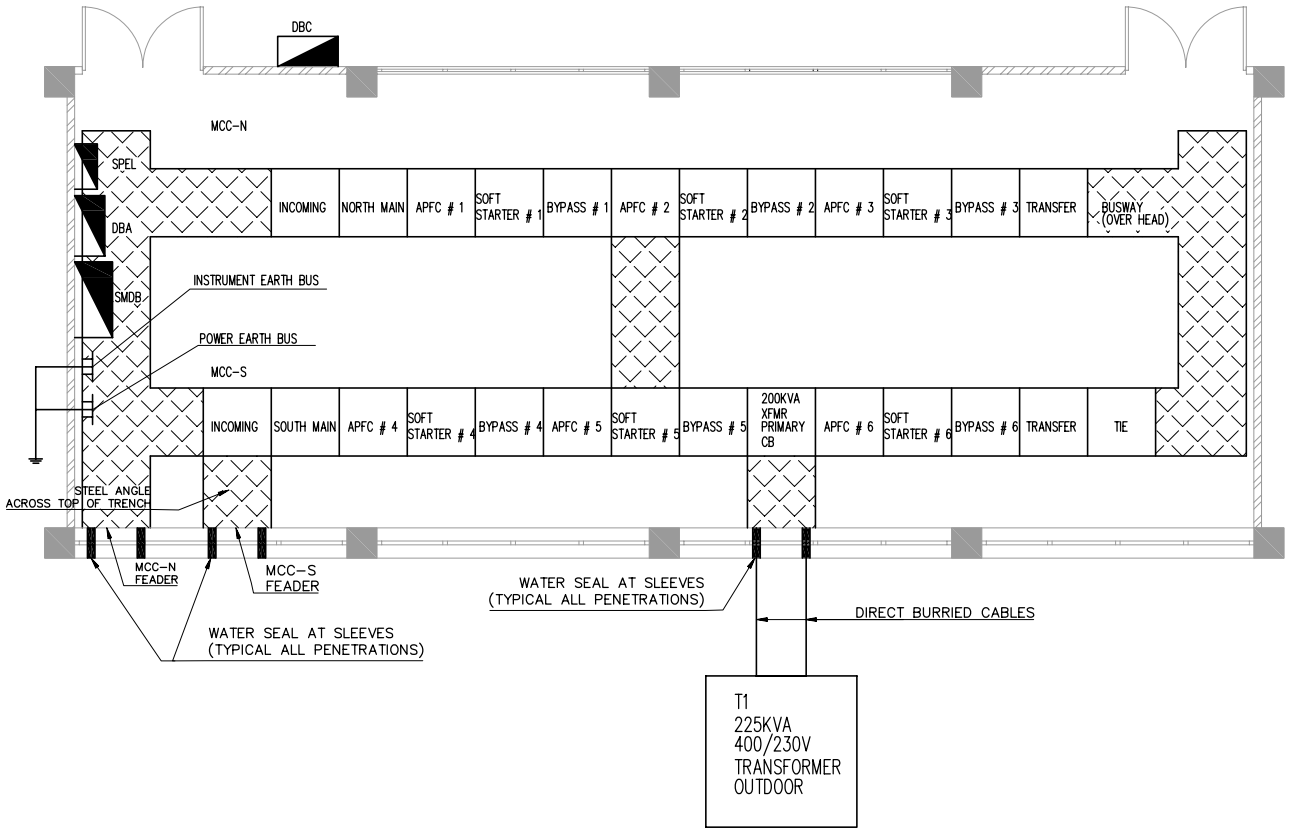


## PANEL ARRANGEMENT IN ELECTRICAL ROOM
1:50

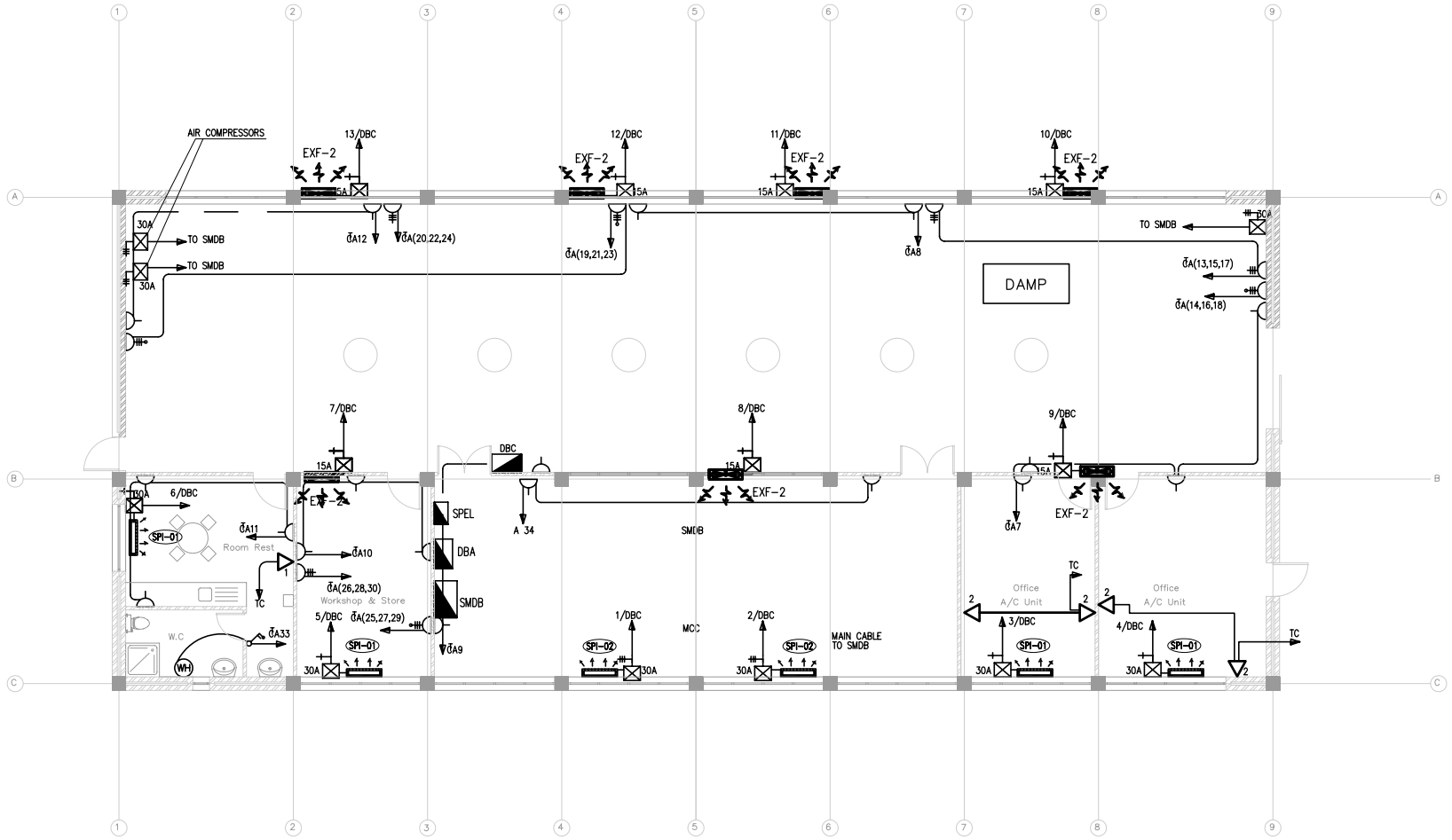


## PUMP BUILDING POWER SOCKET OUTLETS PLAN
1:100

NOTE:
1. TYPE WIRE PER SPECIFICATION
2. NUMBER OF WIRES AND CONDUIT AS REQUIRED

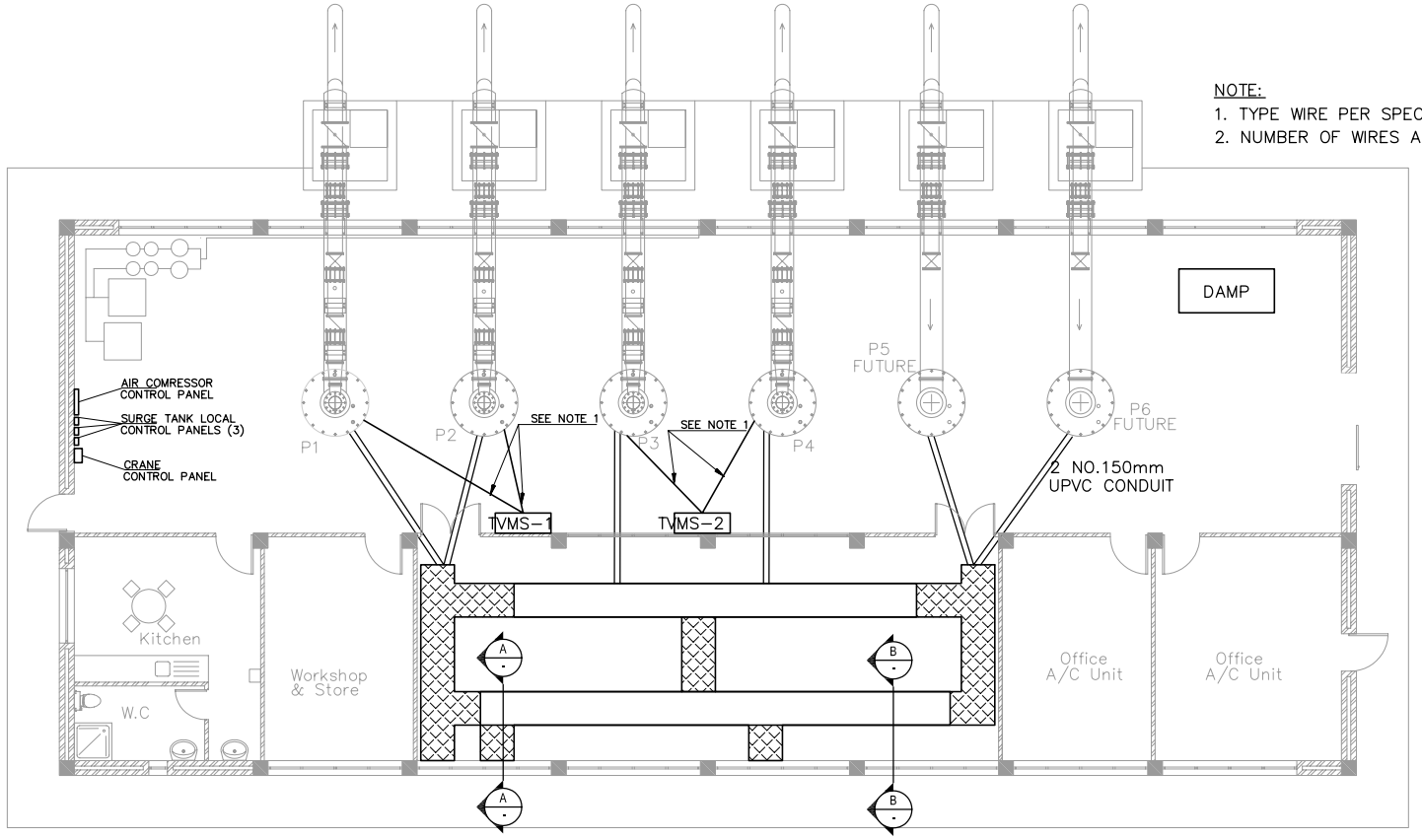


## TRENCHES ARRANGEMENT IN ELECTRICAL ROOM
1:100

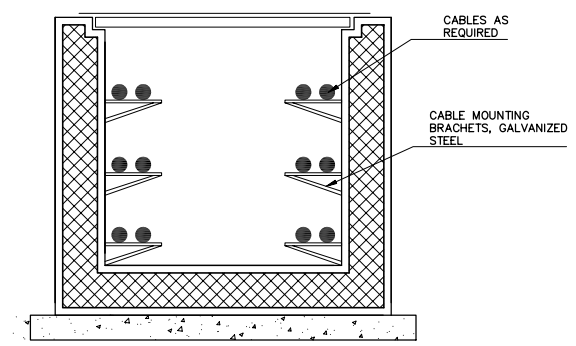


SECTION A
NTS

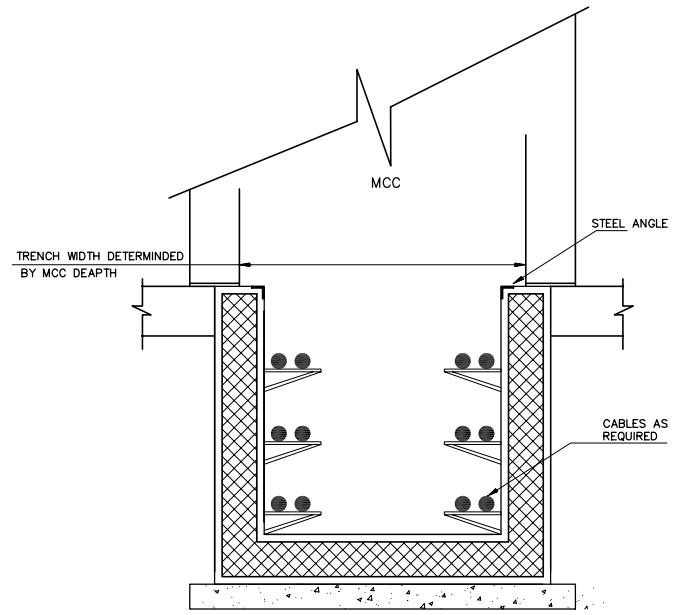


SECTION B
NTS

REDUCED SIZE DRAWINGS

| REV. | DATE | DRAWN | CHKD | REMARKS |
|---|---|---|---|---|

| DESIGNED: | CHECKED: | SCALE: |
|---|---|---|
| M.Fr. | S.F. | AS SHOWN |
| DRAWN: | APPROVED: | DATE: |
| M.F. | S.F. | NOV. 2005 |

CDM
CDM International Inc.

NORTHERN GOVERNORATES WATER TRANSMISSION
Eastern Primary Transmission System

**PUMP BUILDING POWER OUTLETS & ELECTRICAL ROOM DETAILS**

PROJECT NO. : 3029-42324

DRAWING NO. : E-10

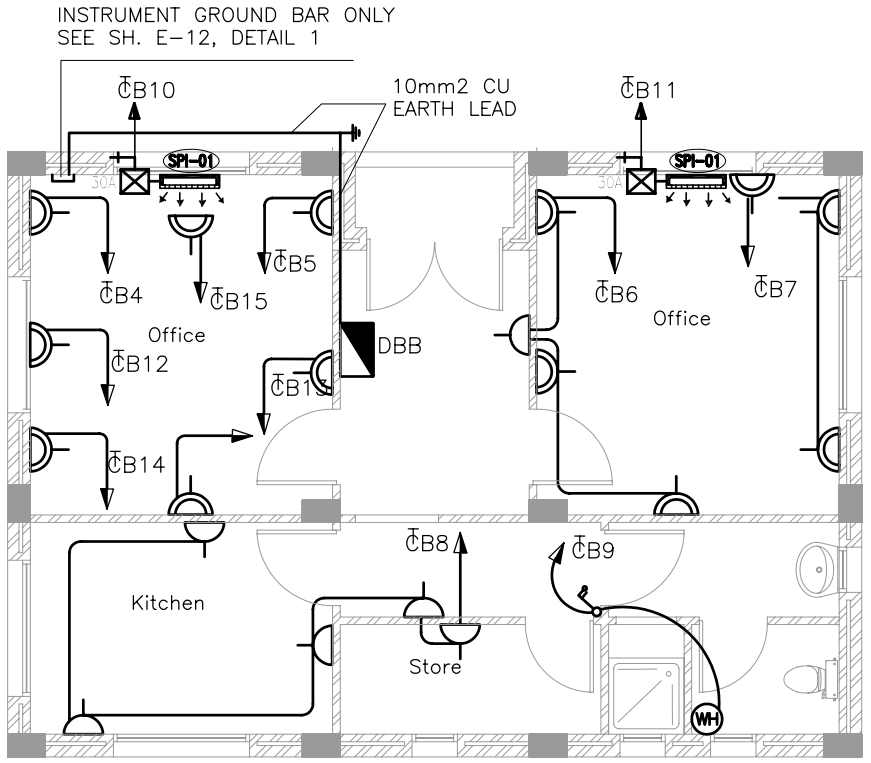


POWER SOCKET OUTLETS

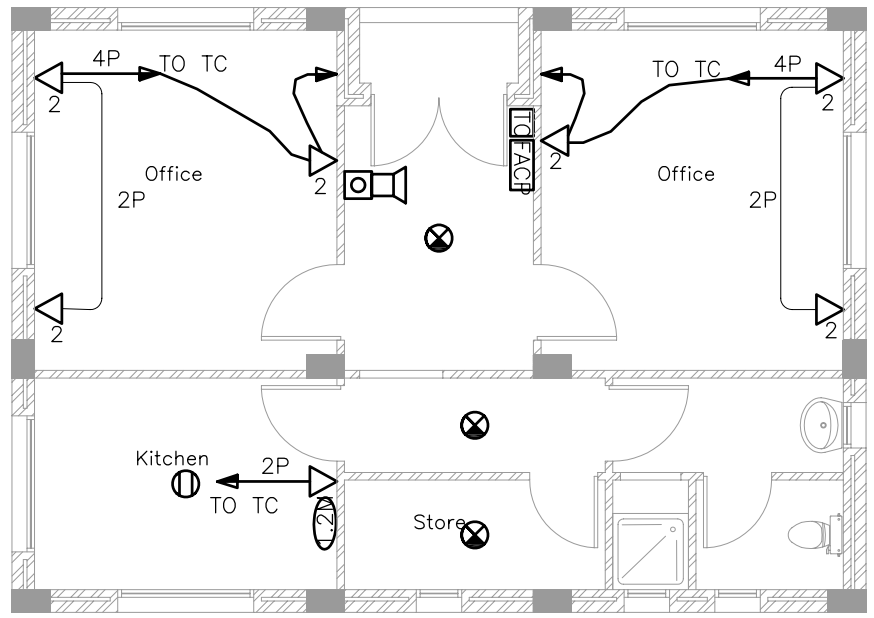


TELEPHONE OUTLETS & FIRE ALARM SYSTEM

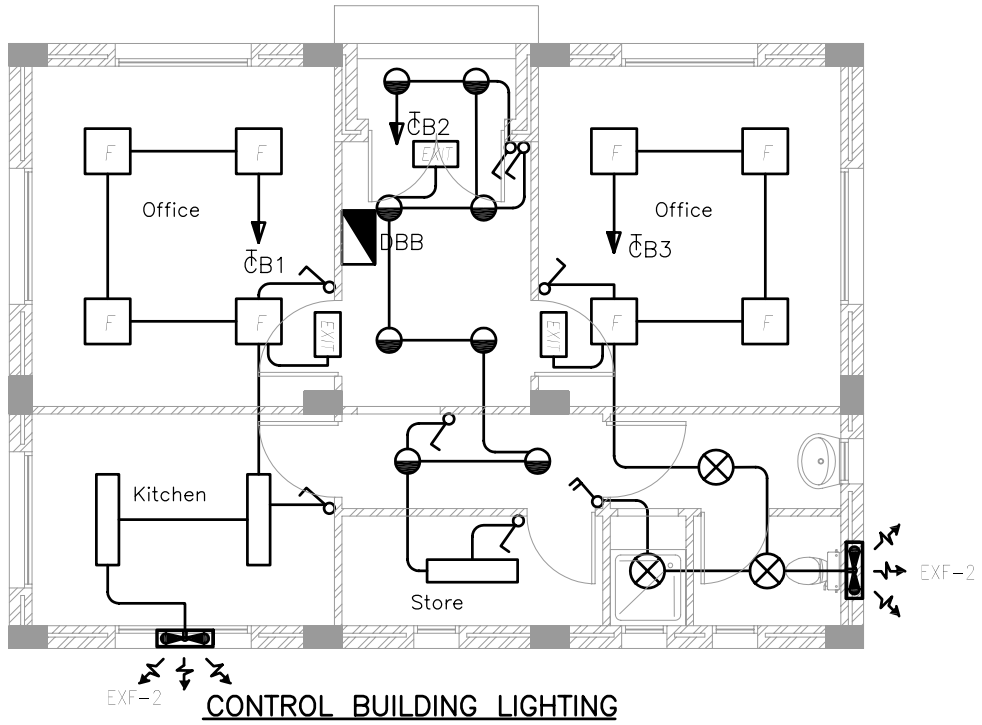


CONTROL BUILDING LIGHTING

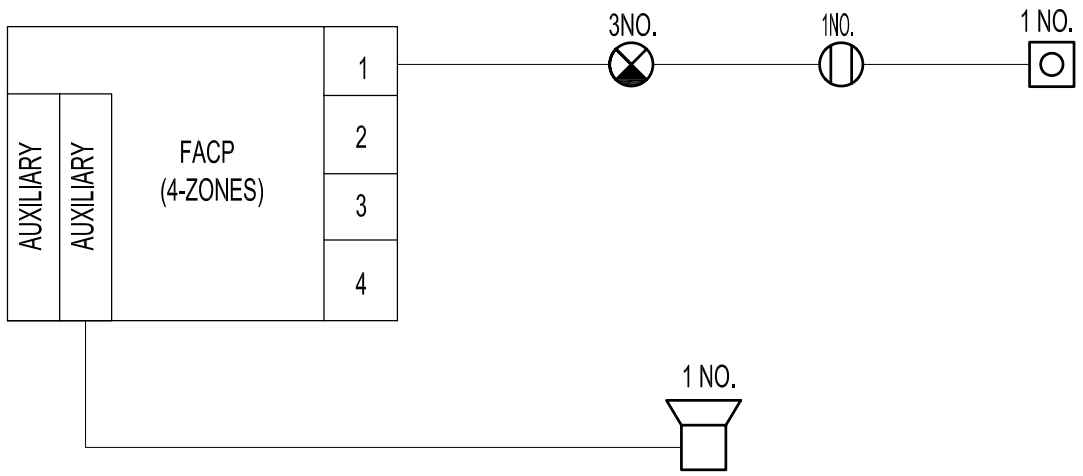


FIRE ALARM CONTROL PANAL RISER DETAILS

REDUCED SIZE DRAWINGS

| REV. | DATE | DRAWN | CHKD | REMARKS | DESIGNED: M.Fr. | CHECKED: S.F. | SCALE: 1:100 | CDM International Inc. | NORTHERN GOVERNORATES WATER TRANSMISSION<br>Eastern Primary Transmission System | PROJECT NO.: 3029-42324 |
|---|---|---|---|---|---|---|---|---|---|---|
| | | | | | DRAWN: M.F. | APPROVED: S.F. | DATE: NOV. 2005 | | CONTROL BUILDING LIGHTING, POWER SOCKET, TELEPHONE OUTLETS & FIRE ALARM DETAILS | DRAWING NO.: E-11 |

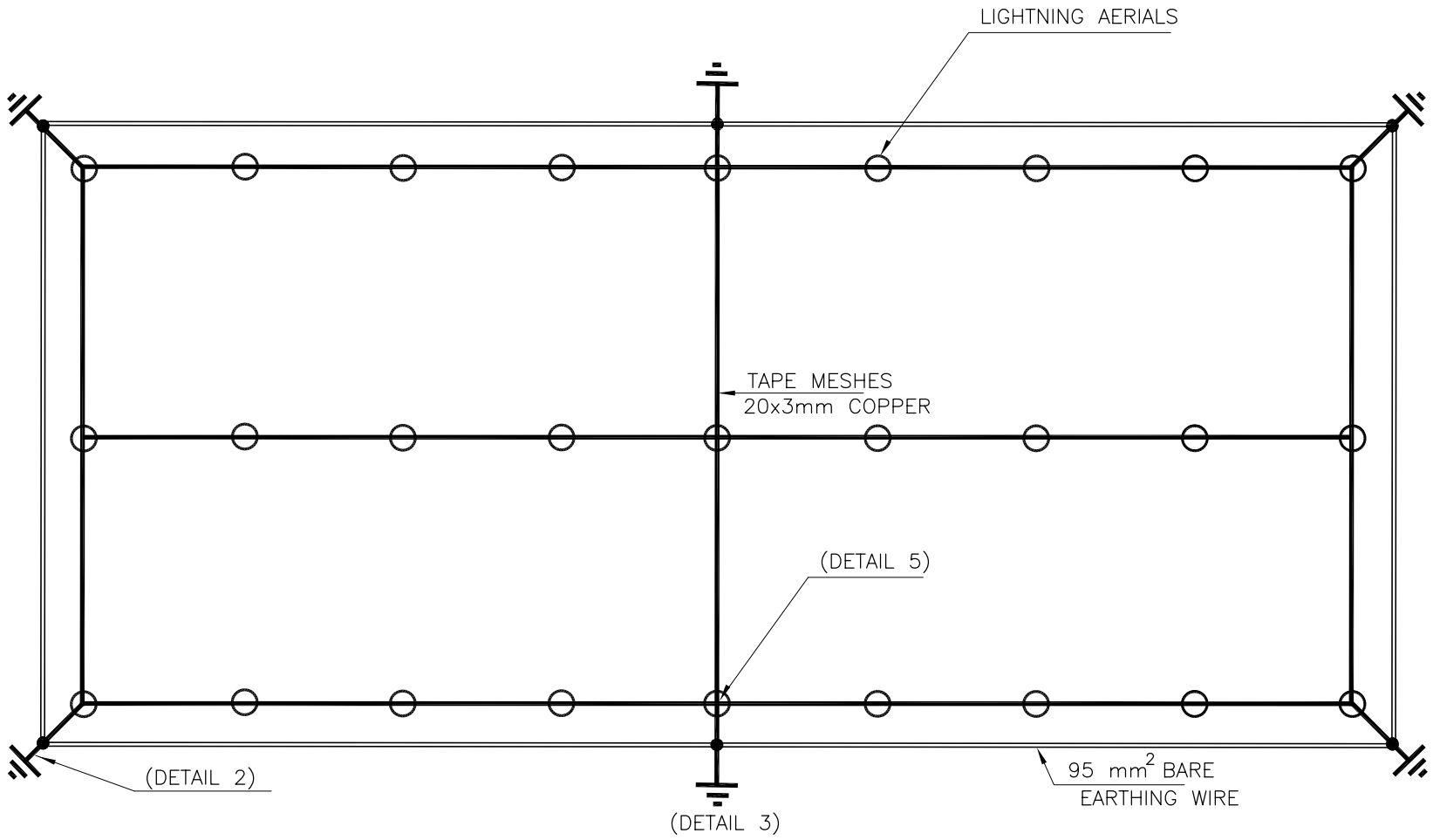


PUMP BUILDING
NTS

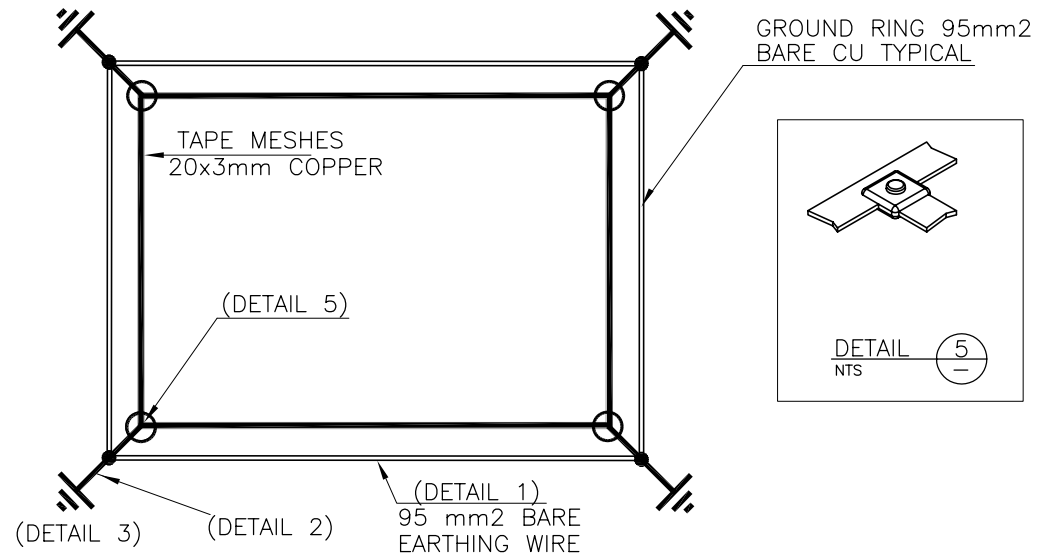


CONTROL BUILDING
NTS

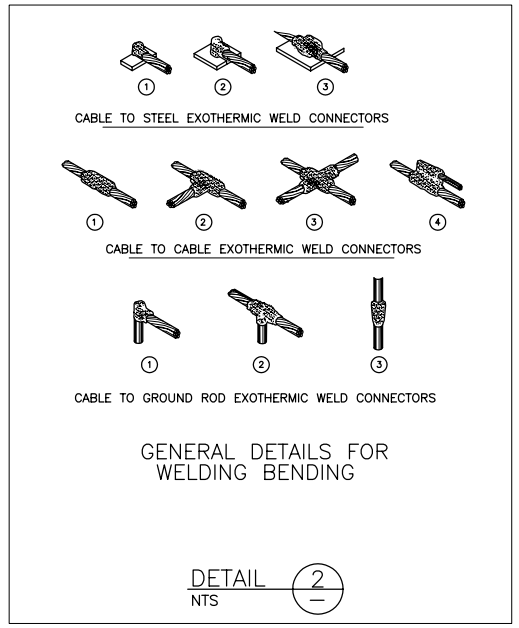


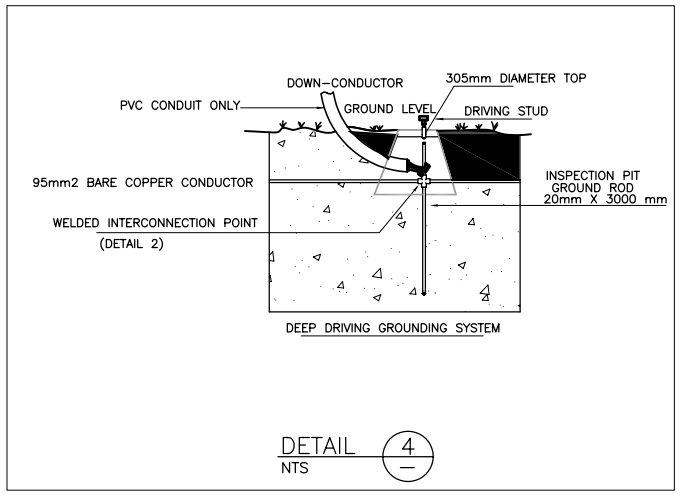


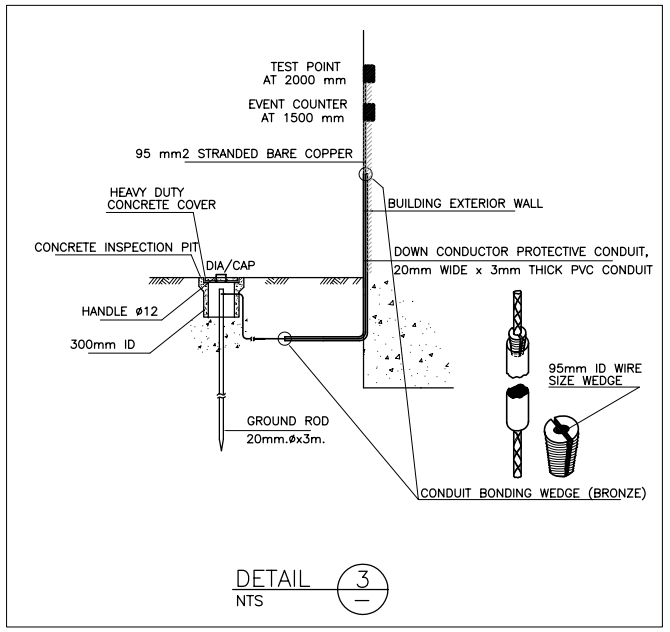


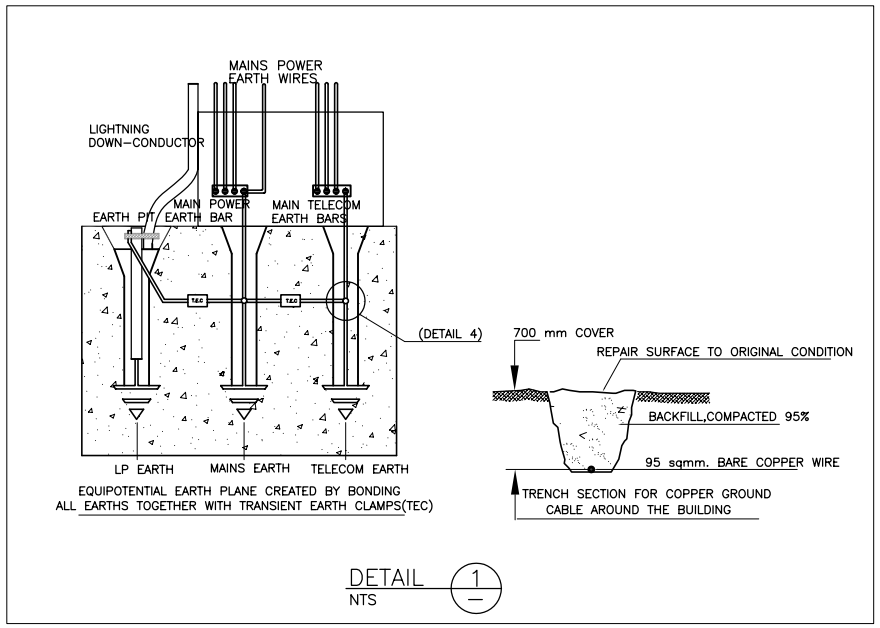


REDUCED SIZE DRAWINGS

| REV. | DATE | DRAWN | CHKD | REMARKS |
|---|---|---|---|---|

| DESIGNED: | CHECKED: | SCALE: |
|---|---|---|
| M.Fr. | S.F. | NTS |
| DRAWN: | APPROVED: | DATE: |
| M.F. | S.F. | NOV. 2005 |

CDM
CDM International Inc.

NORTHERN GOVERNORATES WATER TRANSMISSION
Eastern Primary Transmission System

**PUMP & CONTROL BUILDINGS LIGHTNING SYSTEM**

PROJECT NO. : 3029-42324

DRAWING NO. : E-12