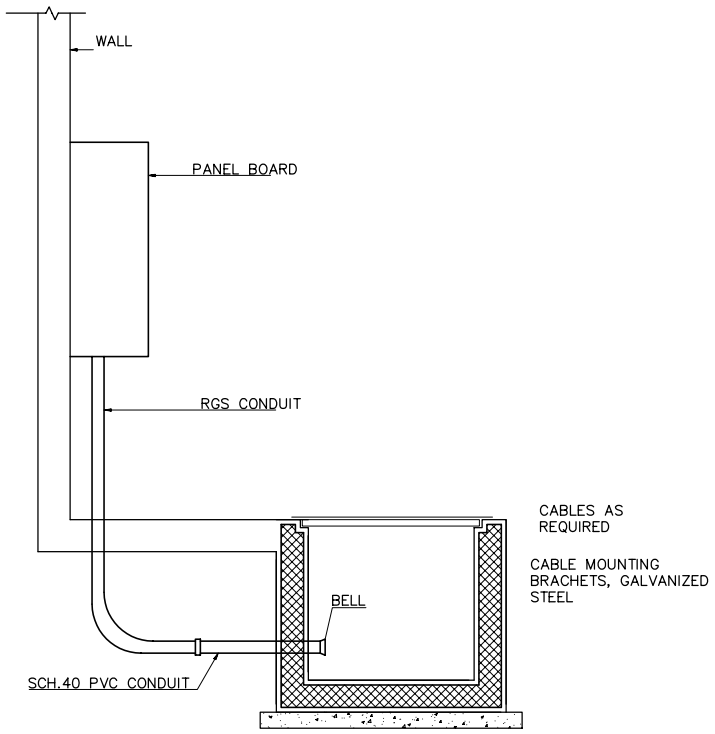

TYPICAL CONDUIT INSTALLATION TRENCH UNDER FLOOR & RISER TO PANEL BOARD

NTS

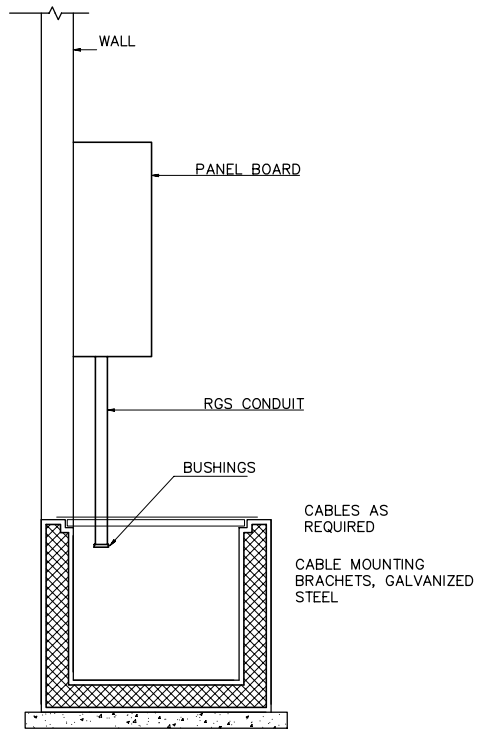

TYPICAL CONDUIT INSTALLATION TRENCH TO PANEL BOARD

NTS

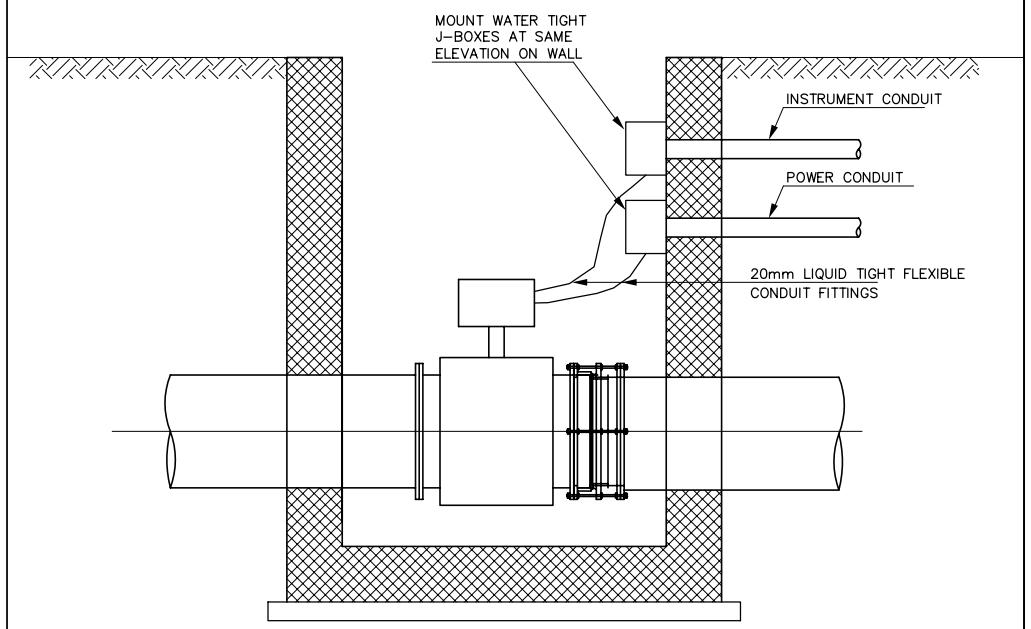

MAGNETIC FLOW METER VAULT ELECTRICAL INSTALLATION

NTS

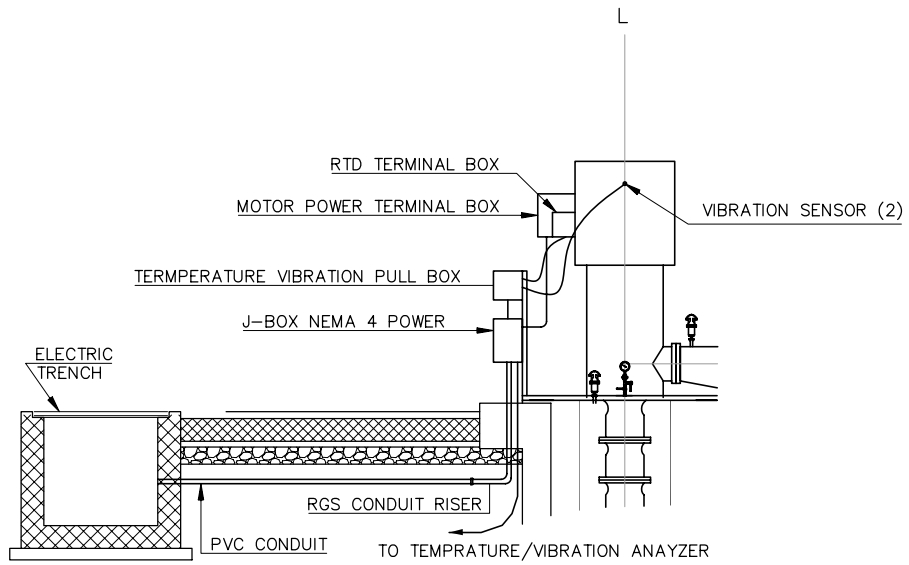

MOTOR POWER AND INSTRUMENTATION INSTALLATION

NTS

REDUCED SIZE DRAWINGS

REV.	DATE	DRAWN	CHKD	REMARKS

DESIGNED:	CHECKED:	SCALE:
M.Fr.	S.F.	NTS
DRAWN:	APPROVED:	DATE:
M.F.	S.F.	NOV. 2005

CDM International Inc.

NORTHERN GOVERNORATES WATER TRANSMISSION
Eastern Primary Transmission System

PUMP BUILDING POWER OUTLETS & ELECTRICAL ROOM DETAILS

PROJECT NO. : 3029-42324

DRAWING NO. : **ED-1**

PIPING LEGEND

MATERIAL CODES

FRP	150 psi PRESSURE CLASS FIBERGLASS REINFORCED PLASTIC PIPE
HDPE	150 psi PRESSURE CLASS HIGH DENSITY POLYETHYLENE PIPE
PVC	SCHEDULE 80 PVC OR C900 PIPE
PVC/D	PVC GRAVITY SEWER PIPE
CU	COPPER TUBING
CPVC	SCHEDULE 80 CPVC PIPE
EPDM	EPDM TUBING
C20	SCHEDULE 40 CARPENTER 20 ALLOY PIPE
304SS	TYPE 304/304L STAINLESS STEEL PIPE
316SS	TYPE 316/316L STAINLESS STEEL PIPE
PVDF	230 psi PRESSURE CLASS PVDF PIPE
PP	150 psi PRESSURE CLASS POLYPROPYLENE PIPE
STL/L	STEEL PIPE, LINED
DIP	DUCTILE IRON PIPE
CMLSP	CEMENT MORTAR–LINED STEEL PIPE
RCP	REINFORCED CONCRETE PIPE

OPERATING FLUID CODE

BD	BLOWDOWN	LPA	LOW PRESSURE AIR
BS	BOTTOM SLUDGE	LPDG	LOW PRESSURE DIGESTER GAS
BYP	BYPASS	LO	LUBE OIL
C	CHILLED WATER	MA	MURIATIC ACID
CHEMD	CHEMICAL DRAIN	NAOH	SODIUM HYDROXIDE (CAUSTIC SOLUTION)
CND	CONDENSER	NG	NATURAL GAS
COND	CONDENSATE	OF	OVERFLOW
CS	CHLORINE SOLUTION	O2	OXYGEN
CSL	CAUSTIC SOLUTION	P	PROPANE
CW	CITY WATER	PD	PROCESS DRAIN
D	DRAIN	PE	PRIMARY EFFLUENT
DC	DIGESTER CLEANING	PI	PRIMARY INFLUENT
DISCH	DISCHARGE	POL	POLYMER
DG	DIGESTER GAS	POTW	POTABLE WATER
DS	DIGESTED SLUDGE	PS	PRIMARY SLUDGE
FA	FOUL AIR	PW	PLANT WATER
FD	FLOOR DRAIN	RD	ROOF DRAIN
FECL2	FERROUS CHLORIDE	RS	RAW SEWAGE
FECL3	FERRIC CHLORIDE	RAS	RETURN ACTIVATED SLUDGE
FM	FORCE MAIN	REC	RECIRCULATION
FO	FUEL OIL	RW	RECLAIMED WATER
FSW	FIRE SUPPLY WATER	S	SCUM
FW	FEED WATER	SAM	SAMPLE
GR	GRIT	SEW	SEWER
HCL	HYDROCHLORIC ACID	SC	SLUDGE CAKE
HPA	HIGH PRESSURE AIR	SD	SANITARY DRAIN
HPDG	HIGH PRESSURE DIGESTER GAS	SE	SECONDARY EFFLUENT
HPNG	HIGH PRESSURE NATURAL GAS	SI	SECONDARY INFLUENT
HPW	HIGH PRESSURE WATER	SN	SUPERNATANT
HW	HOT WATER	SO	SLOP OIL
HWR	HOT WATER RETURN	SOD	SLOP OIL DRAIN
HWS	HOW WATER SUPPLY	SPD	SUMP PUMP DISCHARGE
HYPO	SODIUM HYPOCHLORITE	SS	SANITARY SEWER
H2O2	HYDROGEN PEROXIDE	STRM	STORM DRAIN
IA	INSTRUMENT AIR	SW	SEAL WATER
IRRIG	IRRIGATION	SWR	SOFTENED WATER
IRW	IRRIGATION WATER	TFE	TRICKLING FILTER CLARIFIER EFFLUENT
IW	INDUSTRIAL WATER	TFS	TRICKLING FILTER CLARIFIER SLUDGE
JWR	JACKET WATER RETURN	TWAS	THICKENED WASTE ACTIVATED SLUDGE
JWS	JACKET WATER SUPPLY	V	VENT
JOS	JOINT OUTFALL SEWER	WAS	WASTE ACTIVATED SLUDGE

PIPE FITTINGS AND CONNECTORS

- BLIND FLANGE
- UNION
- Y–STRAINER
- CONCENTRIC REDUCER/ENLARGER
- ECCENTRIC REDUCER/ENLARGER
- FLEXIBLE PIPE CONNECTOR (*)
- FLANGED JOINT
- QUICK CONNECTION
- THREADED CONNECTION W/CAP
- CONTINUED PIPE

(*) RESTRAIN ALL JOINTS UNLESS NOTED

VALVE LEGEND

VALVE ACTUATION

FAILURE POSITION:
FO = FAIL OPEN
FC = FAIL CLOSED
FLP = FAIL LAST POSITION

- M — MOTOR ACTUATOR
- S — SOLENOID ACTUATOR
- P — PNEUMATIC ACTUATOR
- PNEUMATIC ACTUATOR
- DIAPHRAGM

VALVE AND GATES SYMBOLS

- HAND CONTROL VALVE
- ANGLE VALVE
- 3–WAY VALVE
- BALL CHECK VALVE
- BALL VALVE
- 3–WAY BALL VALVE
- 4–WAY BALL VALVE
- BUTTERFLY VALVE
- CHECK VALVE
- DUAL DISK CHECK VALVE
- DIAPHRAGM CHECK VALVE
- DIAPHRAGM VALVE
- GATE VALVE
- KNIFE GATE VALVE
- GLOBE VALVE
- NEEDLE VALVE
- PLUG VALVE (PV)
- 3–WAY PLUG VALVE
- 4–WAY PLUG VALVE
- PINCH VALVE
- TELESCOPING VALVE
- ROTARY VALVE
- PRESSURE RELIEF VALVE
- VACUUM RELIEF VALVE
- AIR/VACUUM RELIEF VALVE
- PRESSURE REDUCING VALVE
- REGULATED SIDE PRESSURE REGULATING VALVE OR BACK PRESSURE VALVE OR PRESSURE SUSTAINING VALVE
- BACKFLOW PREVENTER VALVE
- SAMPLE VALVE
- SLEEVE VALVE
- VACUUM BREAKER VALVE
- AIR VENT RELIEF VALVE
- AIR RELIEF VALVE
- FOOT VALVE W/ STRAINER
- AIR RELEASE VALVE
- VACUUM REGULATOR
- FLAP VALVE
- INJECTION VALVE
- SLUICE GATE
- WEIR GATE
- SLIDE GATE

EQUIPMENT SYMBOLS

- MOTOR
- CHEMICAL METERING PUMP
- SUBMERSIBLE PUMP
- VERTICAL TURBINE PUMP
- CENTRIFUGAL PUMP
- CENTRIFUGAL BLOWER/FAN
- POSITIVE DISPLACEMENT BLOWER
- AIR COMPRESSOR
- PLUNGER/POSITIVE DISPLACEMENT PUMP
- DOUBLE DISK PUMP
- AIR OPERATED DIAPHRAGM PUMP
- PERISTALTIC PUMP
- GEAR/ROTARY LOBE PUMP
- DIAPHRAGM PUMP
- GRINDER
- PROGRESSIVE CAVITY PUMP
- HOSE PUMP
- BELT CONVEYOR
- SCREW CONVEYOR
- DIAPHRAGM SEAL
- MIXER
- STATIC MIXER
- IN–LINE MOTIONLESS MIXER
- IN–LINE MECHANICAL MIXER
- AIR INTAKE FILTER
- TANK VENT FILTER
- STRAINER, FILTER OR COALESCER
- CALIBRATION COLUMN
- INJECTION QUILL WITH CORPORATION STOP
- SCRUBBER
- BASKET SCREEN
- BAR SCREEN
- VENT
- PULSATION DAMPENER
- DRAIN
- SPRINKER(S)
- SIGHT GLASS
- RUPTURE DISK
- HORN
- BEACON

EQUIPMENT ABBREVIATIONS

AC	AIR CONDITIONING
ARV	AIR RELEASE VALVE
AVRV	AIR/VACUUM RELIEF VALVE
BFP	BELT FILTER PRESS
BFT	BIOFILTER
BFV	BUTTERFLY VALVE
BV	BALL VALVE
BOL	BOILER
BSR	BARSCREEN
BWR	BLOWER
CB	CATCH BASIN
CEN	CENTRIFUGE
CLR	SCUM OR SLUDGE COLLECTOR
CO	CLEAN OUT
CPLG	COUPLING
CV	CHECK VALVE
CLS	CLASSIFIER
CMP	COMPRESSOR
CND	CONDENSER
CVY	CONVEYOR
DIG	DIGESTER
DMPR	BACK DRAFT DAMPER
DRY	DRYER
DV	DIAPHRAGM VALVE
EJ	EXPANSION JOINT
ENG	ENGINE
EVP	EVAPORATOR
EXH	EXHAUST
EXR	EXCHANGER
FAP	FIRE ALARM PANEL
FH	FIRE HYDRANT
FIL	FILTRATE
FLR	FLARE
FLT	FILTER
FLV	FLAPPER VAVLE
GAT	GATE
GBX	GEARBOX
GDR	GRINDER
GEN	GENERATOR
GLV	GLOBE VALVE
GV	GATE VALVE
HNDLG	HANDLING
HDWKS	HEADWORKS
HTR	HEATER
IBD	ISOLATION/BALANCE DAMPER
JB	JUNCTION BOX
KGV	KNIFE GATE VALVE
LVR	LOUVER
MTR	MOTOR
MXR	MIXER
NV	NEEDLE VAVLE
OPS	OPERATOR (ACTUATOR)
PC	PRIMARY CLARIFIER
PIV	PINCH VALVE
PV	PLUG VALVE
PMP	PUMP
PNL	PANEL
PRD	PRESS. REDUCING VALVE
PRG	PRESS. REGULATING VALVE
PRV	PRESS. RELIEF VALVE
PRVB	PRES RELIEF/VACUUM BREAKER
RPD	REDUCED PRINCIPLE DEVICE
RUD	ROLL–UP DOOR
SAM	SAMPLE
SBR	SCRUBBER
SCRNGS	SCREENINGS
SFS	SAFETY SHOWER
SOF	SOFTENER
SPD	SUMP PUMP DISCHARGE
SPR	SEPERATOR
ST	STEAM
STA	STATION
STR	STRAINER
SWP	SWEEP ALARM ASSEMBLY
TEL	TELEPHONE
TNK	TANK
TUR	TURBINE
TSV	TELESCOPING VALVE
VA	VALVE
VAC	VACUUM
VB	VALVE BOX
VFD	VARIABLE FREQUENCY DRIVE
VNTV	VENT VALVE
WH	WATER HEATING
WSHR	WASHER
WSS	WASTESIDE STREAM
XFMR	TRANSFORMER

REDUCED SIZE DRAWINGS

REV.	DATE	DRAWN	CHKD	REMARKS

DESIGNED:	CHECKED:	SCALE:
N.A.	S.F.	NTS
DRAWN:	APPROVED:	DATE:
N.A.	S.F.	NOV. 2005

CDM International Inc.

NORTHERN GOVERNORATES WATER TRANSMISSION
Eastern Primary Transmission System

P&ID LEGEND 1

PROJECT NO. : 3029-42324

DRAWING NO. : I-1

FLOW ELEMENTS

- ORIFICE PLATE
- MAGNETIC FLOW METER
- PROPELLER FLOW METER
- TURBINE FLOW METER
- ULTRASONIC FLOW METER
- THERMAL MASS FLOWMETER
- VENTURI
- POSITIVE DISPLACEMENT FLOW METER
- AVERAGING PITOT TUBE
- VORTEX FLOW METER
- WEIR
- ROTAMETER
- ROTAMETER WITH INTEGRAL NEEDLE VALVE

GENERAL INSTRUMENT OR FUNCTION SYMBOLS

FUNCTION SYMBOLS	FIELD MOUNTED	PRIMARY PANEL NORMALLY ACCESSIBLE TO OPERATOR (NOTE 1)	LOCAL PANEL NORMALLY ACCESSIBLE TO OPERATOR (NOTE 1)
DISCRETE INSTRUMENTS			
RTU OR COMPUTER SHARED CONTROL			
COMPUTER FUNCTION			
PROGRAMMABLE CONTROLLER			

NOTES:

1. A DASHED CENTER SINGLE LINE OR DOUBLE LINE INDICATES PRIMARY OR LOCAL PANEL NORMALLY INACCESSIBLE TO OPERATOR OR BACK PANEL MOUNTED.

Ex:

- MISCELLANEOUS HARDWIRED INTERLOCK
- RTU INTERLOCK
- INSTRUMENTS SHARING COMMON HOUSING
- PILOT LIGHT
- LOGIC BLOCK

INSTRUMENTATION FUNCTIONAL CODE

	FIRST LETTER		SUCCEEDING LETTERS (3)		
	MEASURED OR INDICATING VARIABLE	MODIFIER	READOUT OR PASSIVE FUNCTION	OUTPUT FUNCTION	MODIFIER
A	ANALYSIS		ALARM		
B	BURNER,COMBUSTION		USER'S CHOICE	USER'S CHOICE	USER'S CHOICE
C	CONDUCTIVITY (ELECTRICAL)			CONTROL	
D	DENSITY (MASS) OR SPECIFIC GRAVITY	DIFFERENTIAL			
E	VOLTAGE (EMF)		PRIMARY ELEMENT		
F	FLOW RATE	RATIO (FRACTION)			
G	GAGING (DIMENSIONAL)		GLASS		
H	HAND (MANUALLY INITIATED)				HIGH
I	CURRENT (ELECTRICAL)		INDICATE		
J	POWER	SCAN			
K	TIME OR TIME–SCHEDULE			CONTROL STATION	
L	LEVEL		LIGHT (PILOT)		LOW
M	MOISTURE OR HUMIDITY	MOMENTARY			MIDDLE OR INTERMEDIATE
N	USER'S CHOICE		USER'S CHOICE	USER'S CHOICE	USER'S CHOICE
O	USER'S CHOICE		ORIFICE (RESTRICTION)		
P	PRESSURE OR VACUUM		POINT (TEST CONNECTION)		
Q	QUANTITY OR EVENT	INTERGRATE OR TOTALIZE			
R	RADIATION		RECORD OR PRINT		
S	SPEED OR FREQUENCY	SAFETY		SWITCH	
T	TEMPERATURE			TRANSMIT	
U	MULTIVARIABLE		MULTIFUNCTION	MULTIFUNCTION	MULTIFUNCTION
V	VIBRATION			VALVE, DAMPER OR LOUVER	
W	WEIGHT OR FORCE		WELL		
X	UNCLASSIFIED	X AXIS	UNCLASSIFIED	UNCLASSIFIED	UNCLASSIFIED
Y	EVENT,STATE, PRESENCE	Y AXIS		RELAY OR COMPUTE DRIVE, ACTUATE	
Z	POSITION	Z AXIS		(FINAL CONTROL ELEMENT)	

SIGNAL CONVERTERS

XY — X/X — OUTPUT — INPUT — FUNCTIONAL CODE

- E = VOLTAGE
- F = FREQUENCY
- H = HYDRAULIC
- I = CURRENT
- P = PNEUMATIC
- PF = PULSE FREQUENCY
- PD = PULSE DURATION
- R = RESISTANCE
- √ = SQUARE ROOT EXTRACTION
- Σ = SUM

HAND SWITCHES

HS — XXX — SPECIFIC SWITCH FUNCTION, (TYP)

SELECTOR SWITCH

- AO = AUTO/OFF
- AM = AUTO/MANUAL
- CM = COMPUTER/MANUAL
- CL = COMPUTER/LOCAL
- ES = E–STOP
- FR = FORWARD/REVERSE
- FOR = FORWARD/OFF/REVERSE
- FS = FAST/SLOW
- FOS = FAST/OFF/SLOW
- HOA = HAND/OFF/AUTO
- LLS = LEAD/LAG/STANDBY
- LOR = LOCAL/OFF/REMOTE
- LOS = LOCKOUT STOP
- LR = LOCAL/REMOTE
- OC = OPEN/CLOSE
- OCA = OPEN/CLOSE/AUTO
- OCR = OPEN/CLOSE/REMOTE
- OO = ON/OFF
- OSC = OPEN/STOP/CLOSE
- SS = START/STOP
- SOR = START/OFF/RESET

INSTRUMENTATION TAGGING

XXX / #N

FUNCTIONAL IDENTIFICATION PER ISA STANDARDS AS MODIFIED FOR USE IN THIS CONTRACT (SEE TABLE THIS SHEET)

XXX–Y YYY N

- SUFFIX TO DIFFERENTIATE MULTIPLE FUNCTIONAL CODES (WHEN REQUIRED)
- LOOP NUMBER
- AREA DESIGNATION
- FUNCTIONAL CODE

EXAMPLE

FI / 101A

FI = FUNCTIONAL CODE = FLOW INDICATOR
101 = LOOP NUMBER
A = FUNCTIONAL SUFFIX CODE
COMPLETE INSTRUMENT TAG NUMBER IS FI–101A

LEVEL ELEMENTS

- ULTRASONIC
- RADAR
- CAPACITANCE
- CONDUCTANCE
- BUBBLER TUBE
- LE — GUIDED RADAR
- FLOAT

ANALYTICAL DESCRIPTORS

CL2	CHLORINE
COND	CONDUCTIVITY
DO	DISSOLVED OXYGEN
H2O2	HYDROGEN PEROXIDE
LEAK	LEAK DETECTION
NH3	AMMONIA
O2	AMBIENT OXYGEN
ORP	OXIDATION REDUCTION POTENTIAL
pH	HYDROGEN ION CONCENTRATION
TURB	TURBIDITY

INSTRUMENT LINE SYMBOLS

- ELECTRICAL SIGNAL
- TELEPHONE SIGNAL
- ELECTROMAGNETIC OR SONIC SIGNAL
- PNEUMATIC SIGNAL
- CAPILLARY TUBE
- HYDRAULIC SUPPLY
- INSTRUMENT SUPPLY OR CONNECTION TO PROCESS
- SCREENED INSTRUMENT LINES INDICATE EXISTING LINES TO REMAIN AS IS (ELECTRIC SIGNAL SHOWN–TYPICAL FOR OTHER SIGNALS)
- SOFTWARE OR DATA LINK SIGNAL
- GPRS SIGNAL
- ES — ELECTRICAL SOURCE
- IA — INSTRUMENT AIR SOURCE

REDUCED SIZE DRAWINGS

I/O SIGNALS

MEASURED VARIABLE OR OUTPUT FUNCTION FROM INSTRUMENT FUNCTIONAL CODE TABLE

- ANALOG INPUT (AI)
- ANALOG OUTPUT (AO)
- DIGITAL INPUT (DI)
- DIGITAL OUTPUT (DO)

REV.	DATE	DRAWN	CHKD	REMARKS

DESIGNED:	CHECKED:	SCALE:
M.Fr.	S.F.	NTS
DRAWN:	APPROVED:	DATE:
M.F.	S.F.	NOV. 2005

CDM International Inc.

NORTHERN GOVERNORATES WATER TRANSMISSION
Eastern Primary Transmission System

P&ID LEGEND 2

PROJECT NO. : 3029-42324

DRAWING NO. : I-2

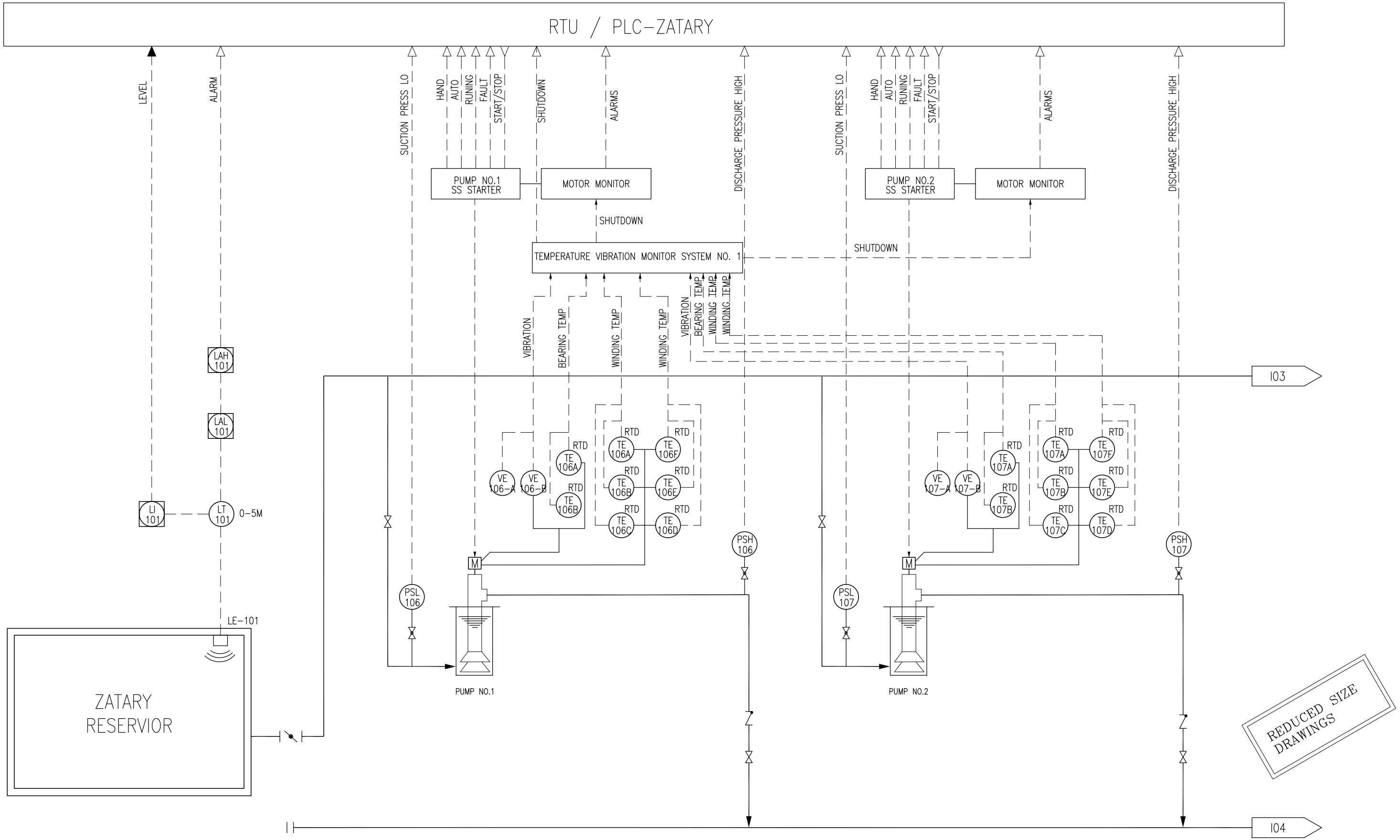

REV.	DATE	DRAWN	CHKD	REMARKS

DESIGNED:	CHECKED:	SCALE:
M.Fr.	S.F.	NTS
DRAWN:	APPROVED:	DATE:
M.F.	S.F.	NOV. 2005

CDM
CDM International Inc.

NORTHERN GOVERNORATES WATER TRANSMISSION
Eastern Primary Transmission System

P & I DIAGRAM 1

PROJECT NO. : 3029-42324

DRAWING NO. : **I-3**

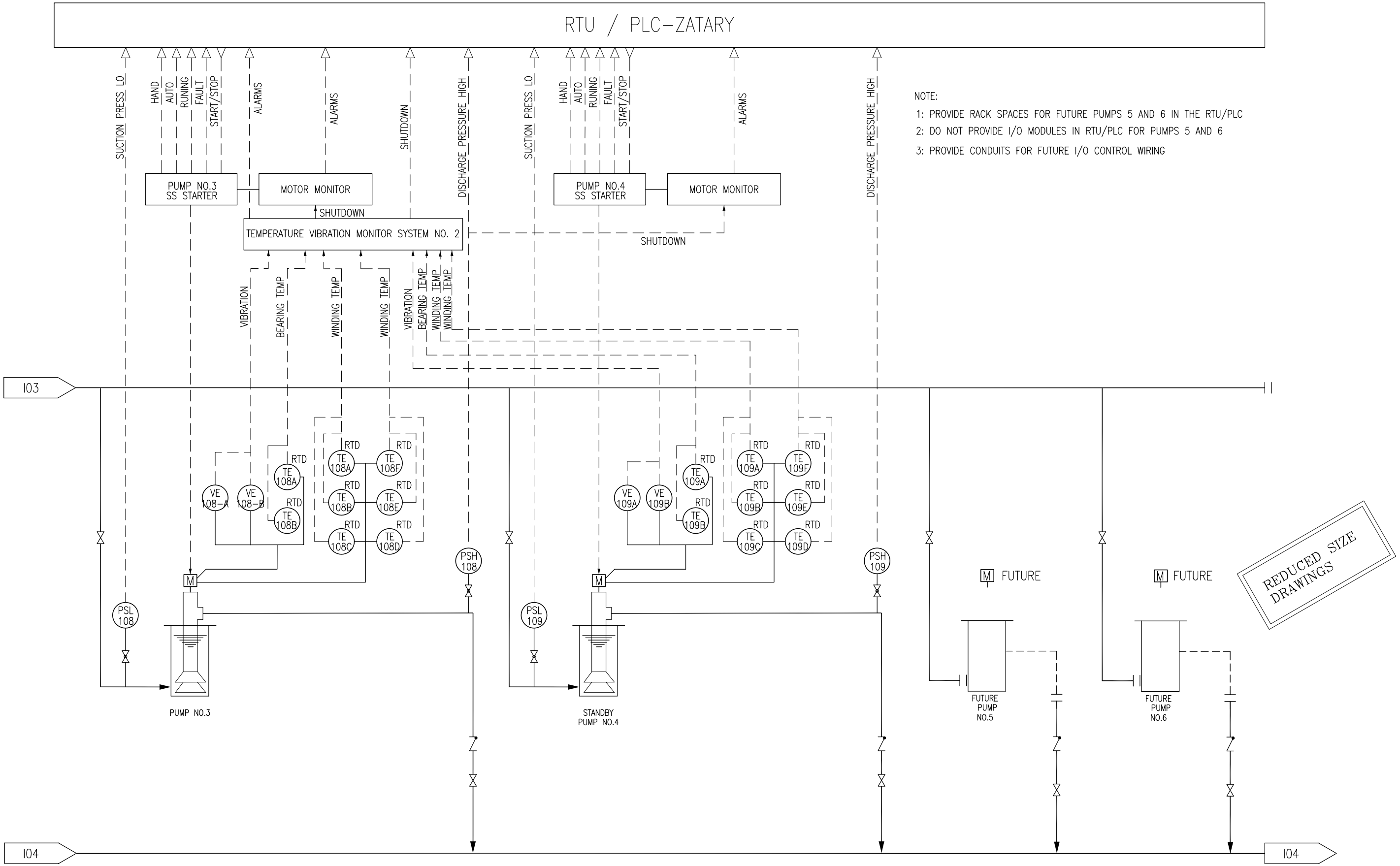

NOTE:

1: PROVIDE RACK SPACES FOR FUTURE PUMPS 5 AND 6 IN THE RTU/PLC

2: DO NOT PROVIDE I/O MODULES IN RTU/PLC FOR PUMPS 5 AND 6

3: PROVIDE CONDUITS FOR FUTURE I/O CONTROL WIRING

REV.	DATE	DRAWN	CHKD	REMARKS

DESIGNED:	CHECKED:	SCALE:
M.Fr.	S.F.	NTS
DRAWN:	APPROVED:	DATE:
M.F.	S.F.	NOV. 2005

CDM International Inc.

NORTHERN GOVERNORATES WATER TRANSMISSION
Eastern Primary Transmission System

P & I DIAGRAM 2

PROJECT NO. : 3029-42324

DRAWING NO. : **I-4**

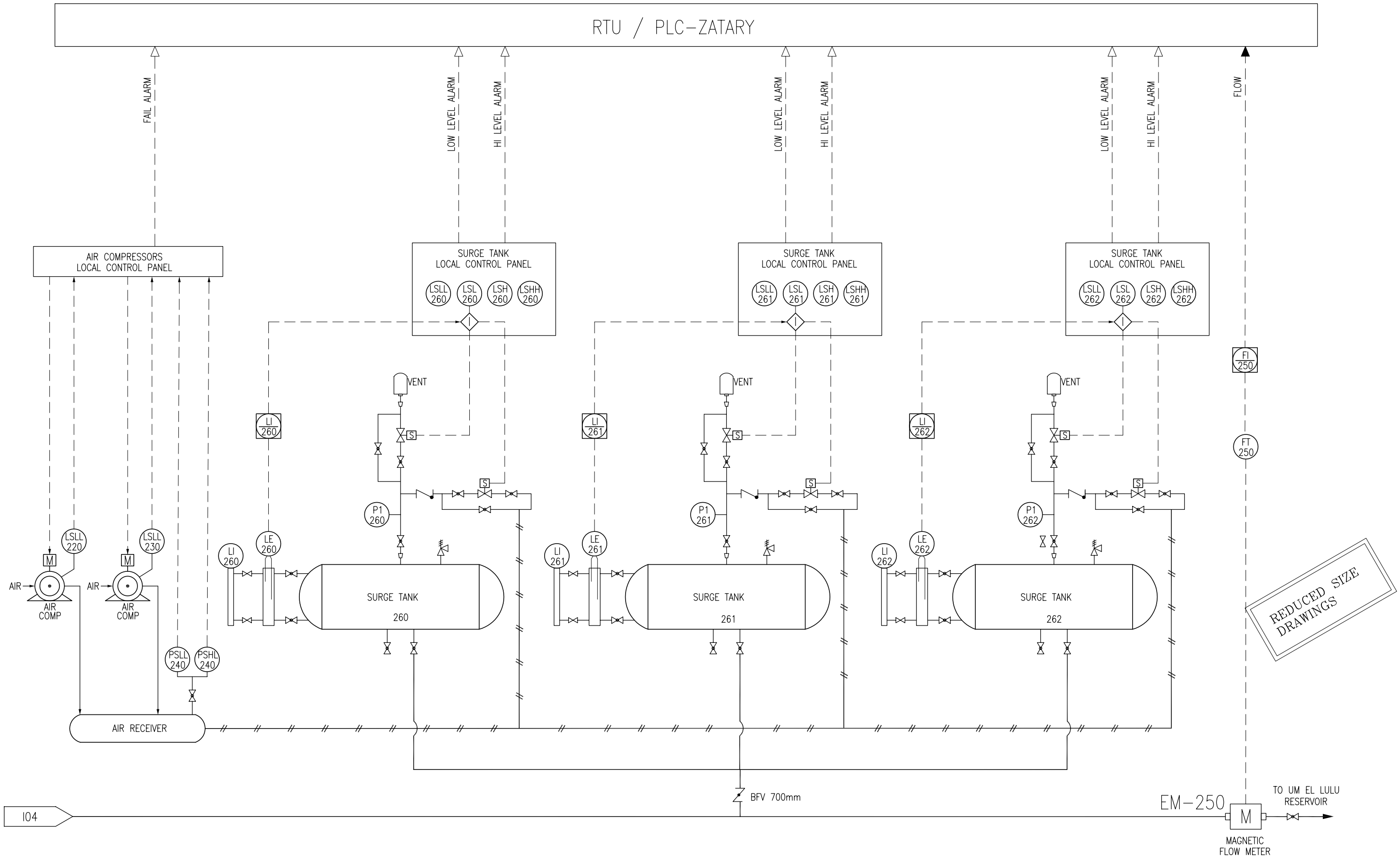

REV.	DATE	DRAWN	CHKD	REMARKS

DESIGNED:	CHECKED:	SCALE:
M.Fr.	S.F.	NTS
DRAWN:	APPROVED:	DATE:
M.F.	S.F.	NOV. 2005

CDM
CDM International Inc.

NORTHERN GOVERNORATES WATER TRANSMISSION
Eastern Primary Transmission System

P & I DIAGRAM 3

PROJECT NO. : 3029-42324

DRAWING NO. : **I-5**