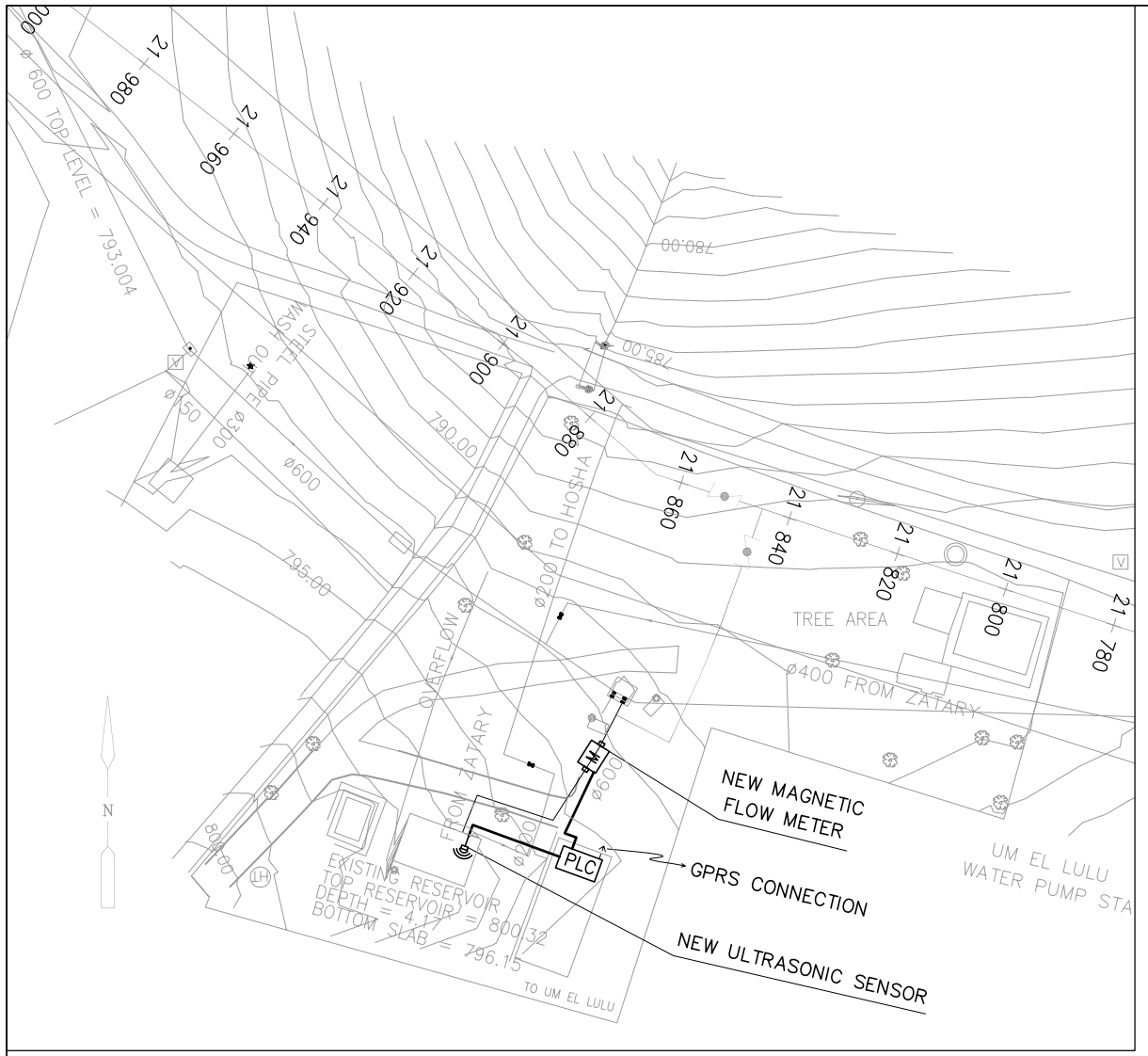

UM EL LULU PUMP STATION PLAN

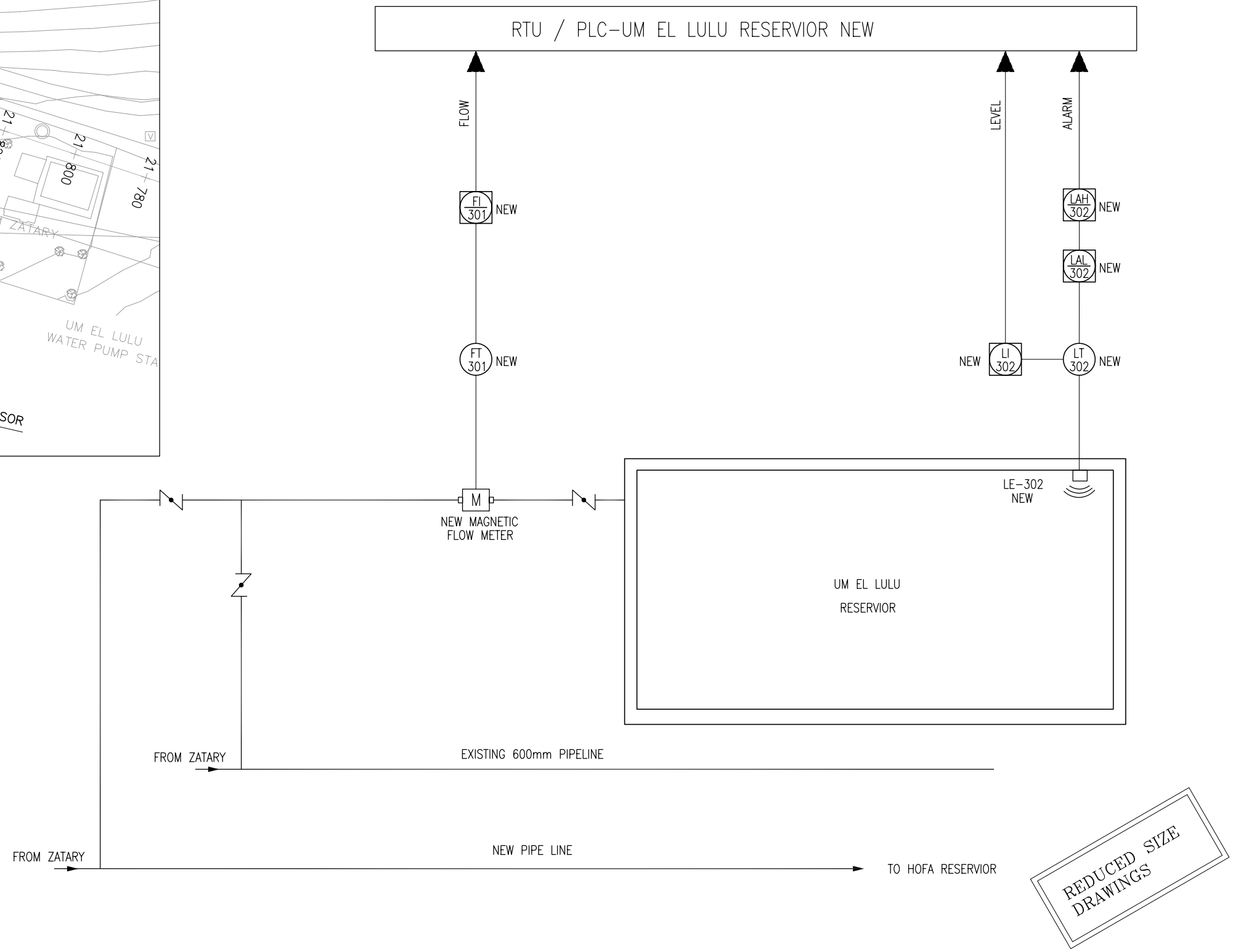

REV.	DATE	DRAWN	CHKD	REMARKS

DESIGNED:	CHECKED:	SCALE:
M.Fr.	S.F.	NTS
DRAWN:	APPROVED:	DATE:
M.F.	S.F.	NOV. 2005

CDM International Inc.

NORTHERN GOVERNORATES WATER TRANSMISSION
Eastern Primary Transmission System

P & I DIAGRAM 4

PROJECT NO. : 3029-42324

DRAWING NO. : **I-6**

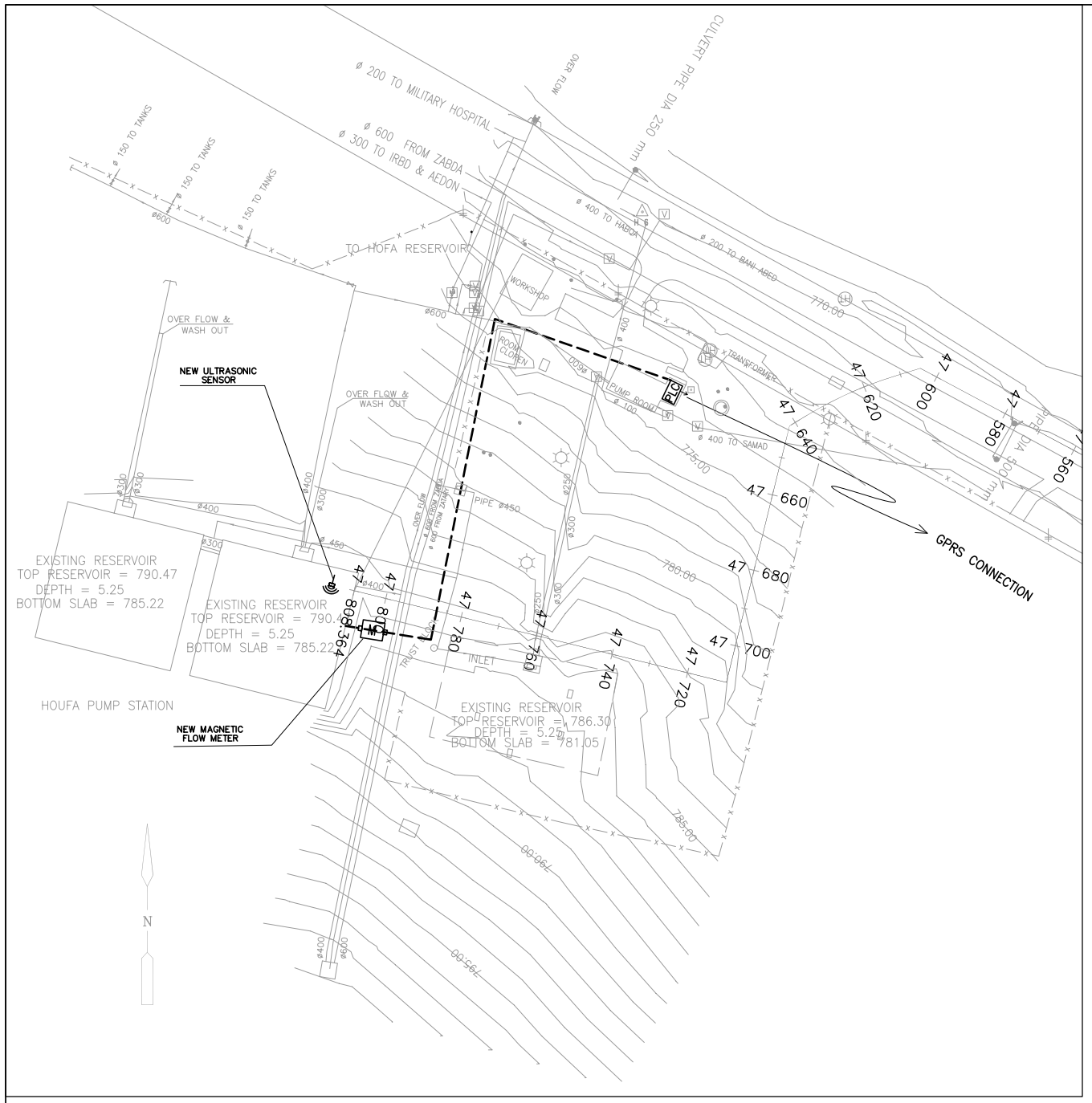

HOFA PUMP STAITION PLAN

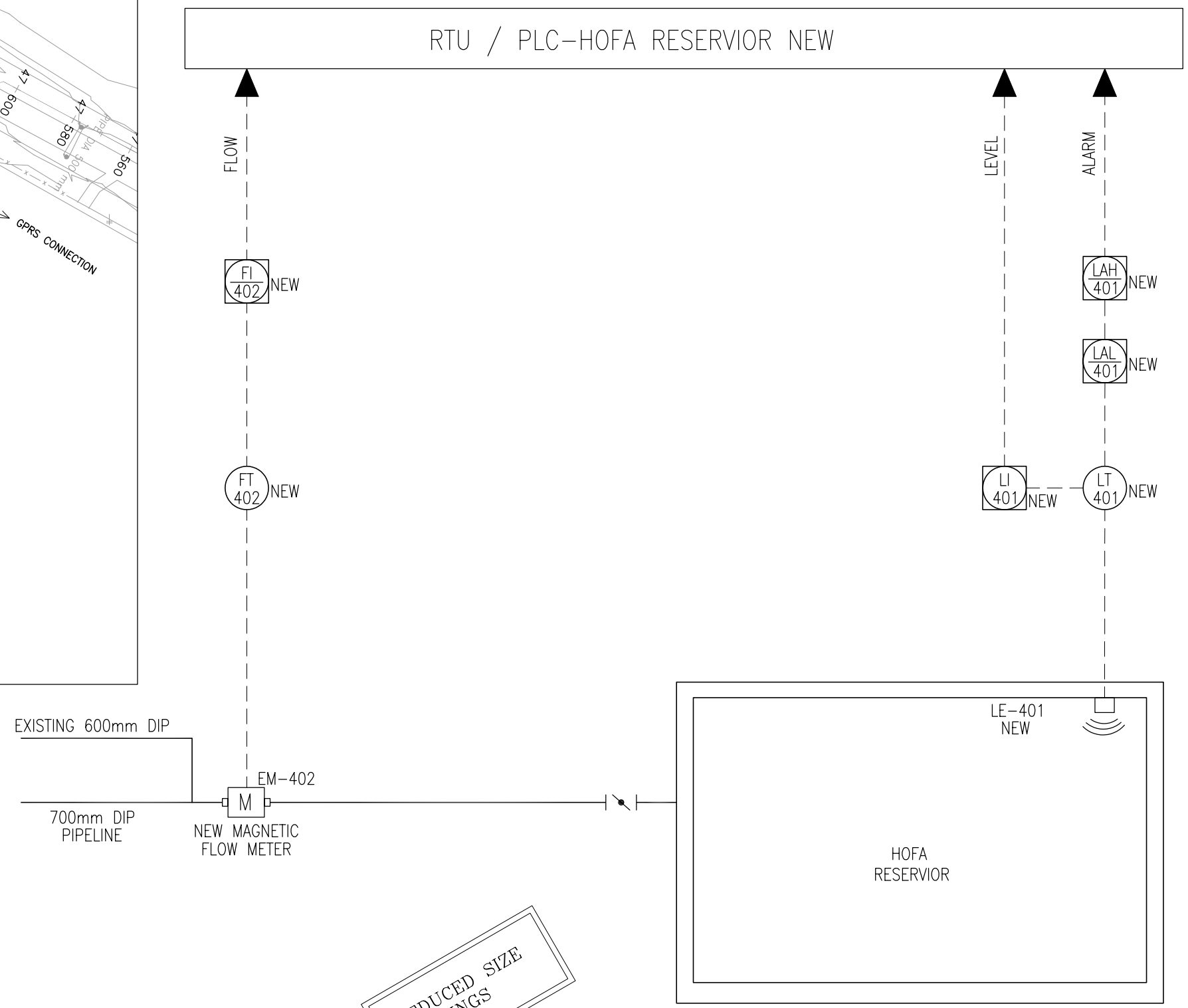

REDUCED SIZE DRAWINGS

REV.	DATE	DRAWN	CHKD	REMARKS	DESIGNED: M.Fr.	CHECKED: S.F.	SCALE: NTS	CDM International Inc.	NORTHERN GOVERNORATES WATER TRANSMISSION Eastern Primary Transmission System	PROJECT NO.: 3029-42324
					DRAWN: M.F.	APPROVED: S.F.	DATE: NOV. 2005		P & I DIAGRAM 5	DRAWING NO.: I-7

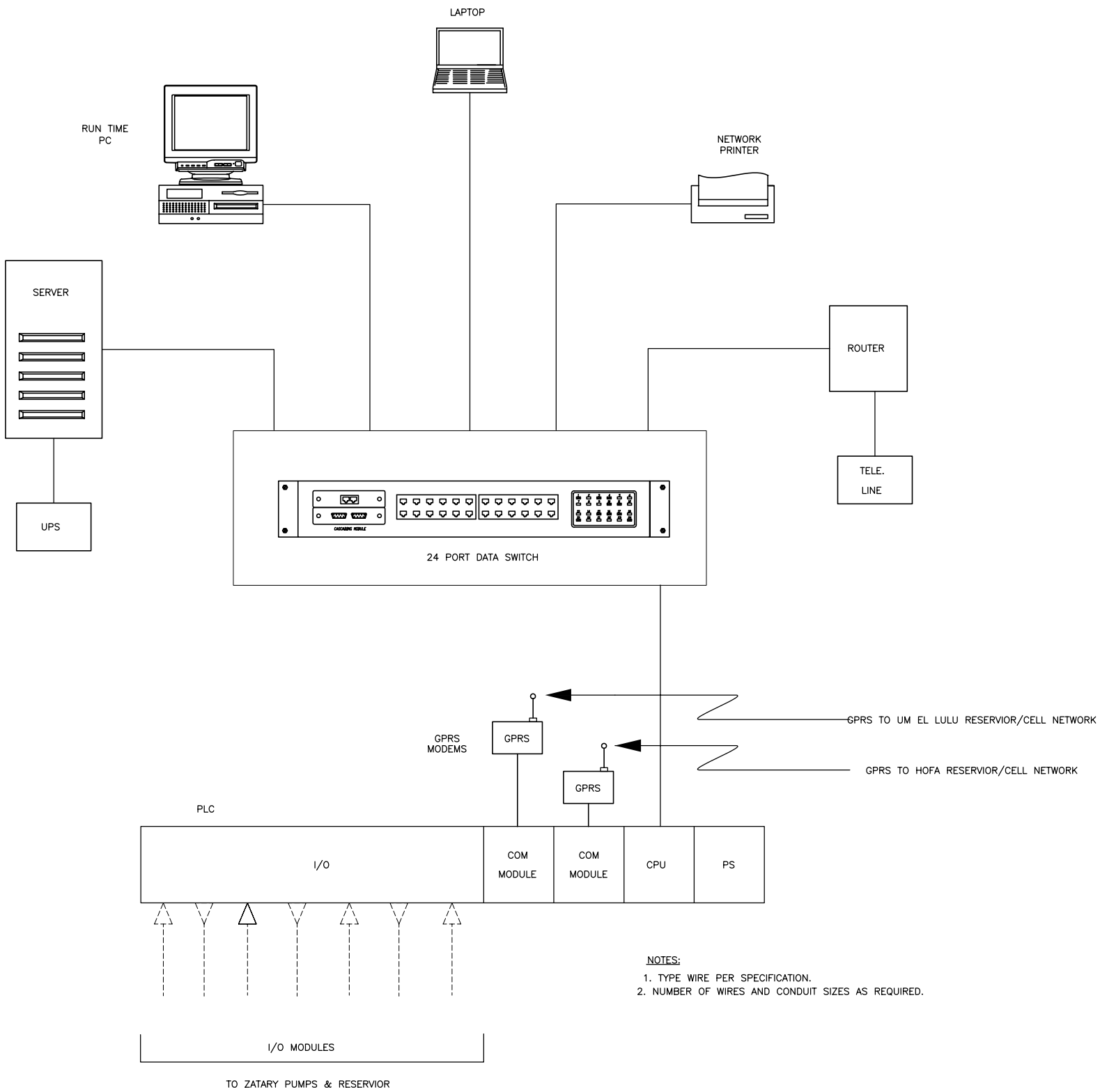

NOTES:

1. TYPE WIRE PER SPECIFICATION.
2. NUMBER OF WIRES AND CONDUIT SIZES AS REQUIRED.

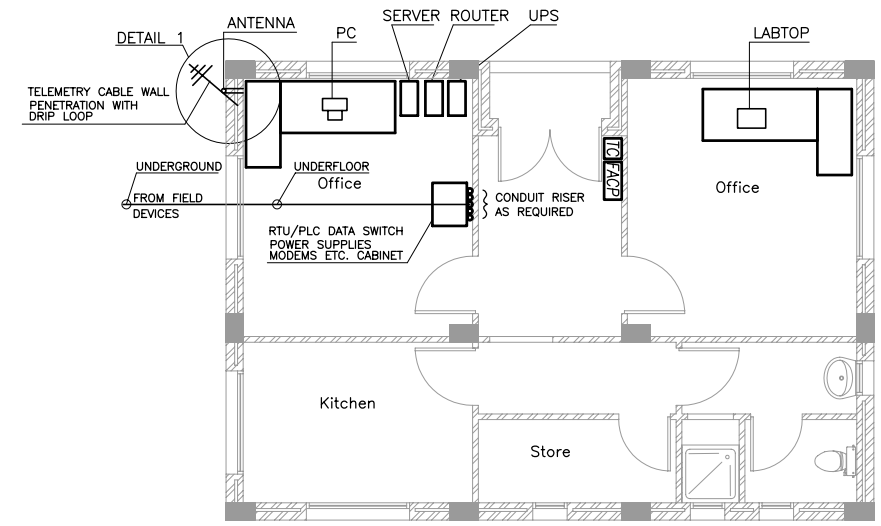

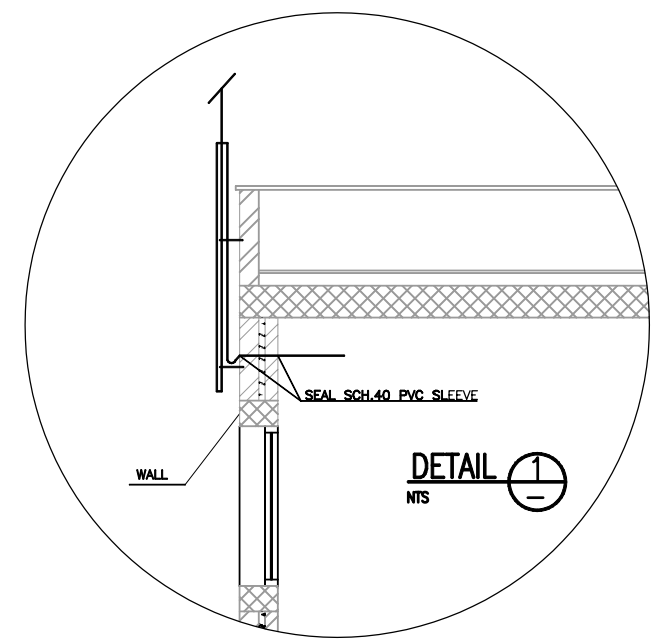

REDUCED SIZE DRAWINGS

CONTROL CENTER/ZATARY PUMP STATION

REV.	DATE	DRAWN	CHKD	REMARKS

DESIGNED:	CHECKED:	SCALE:
M.Fr.	S.F.	NTS
DRAWN:	APPROVED:	DATE:
M.F.	S.F.	NOV. 2005

CDM International Inc.

NORTHERN GOVERNORATES WATER TRANSMISSION
Eastern Primary Transmission System

CONTROL CENTER DETAIL

PROJECT NO. : 3029-42324

DRAWING NO. : I-8

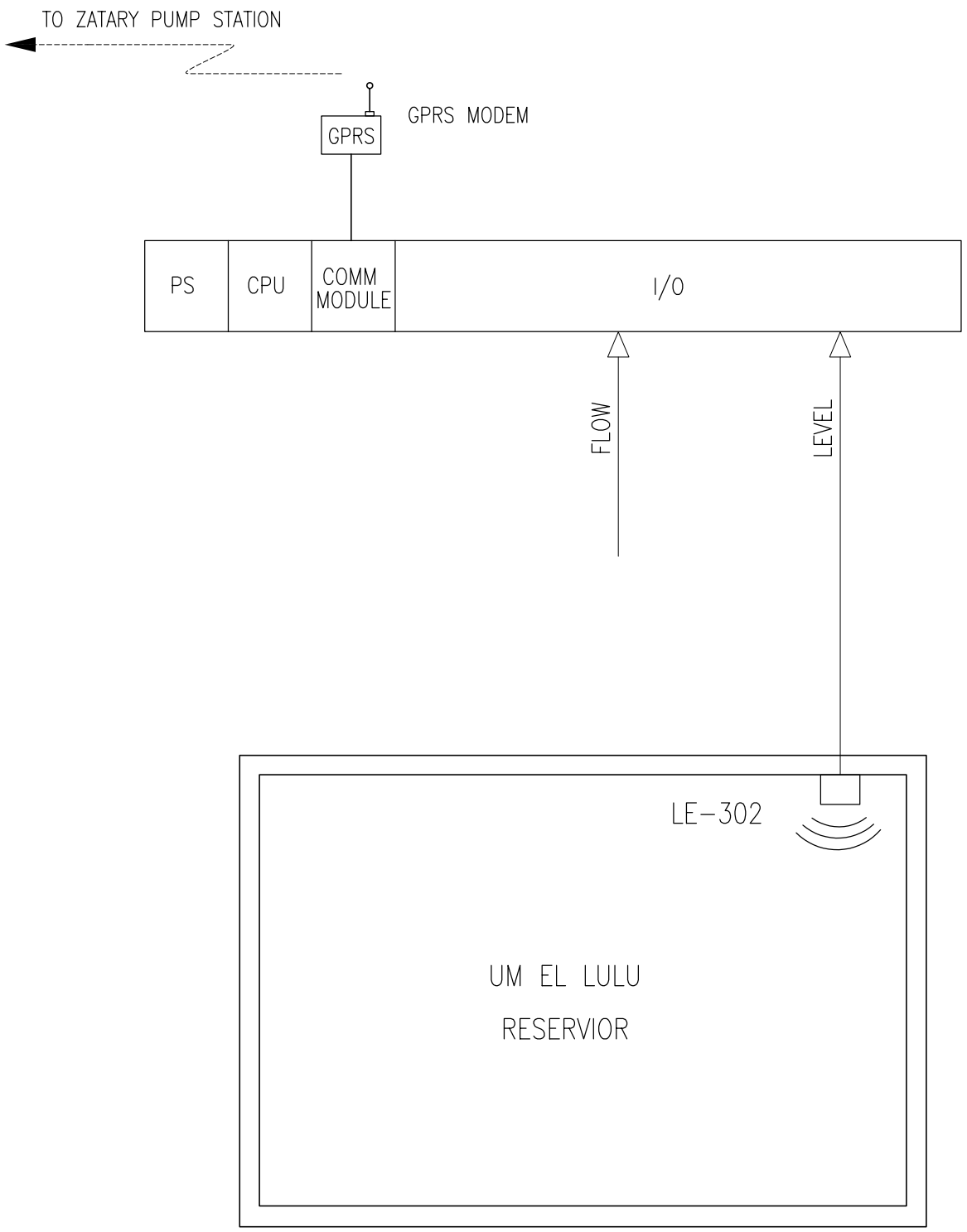

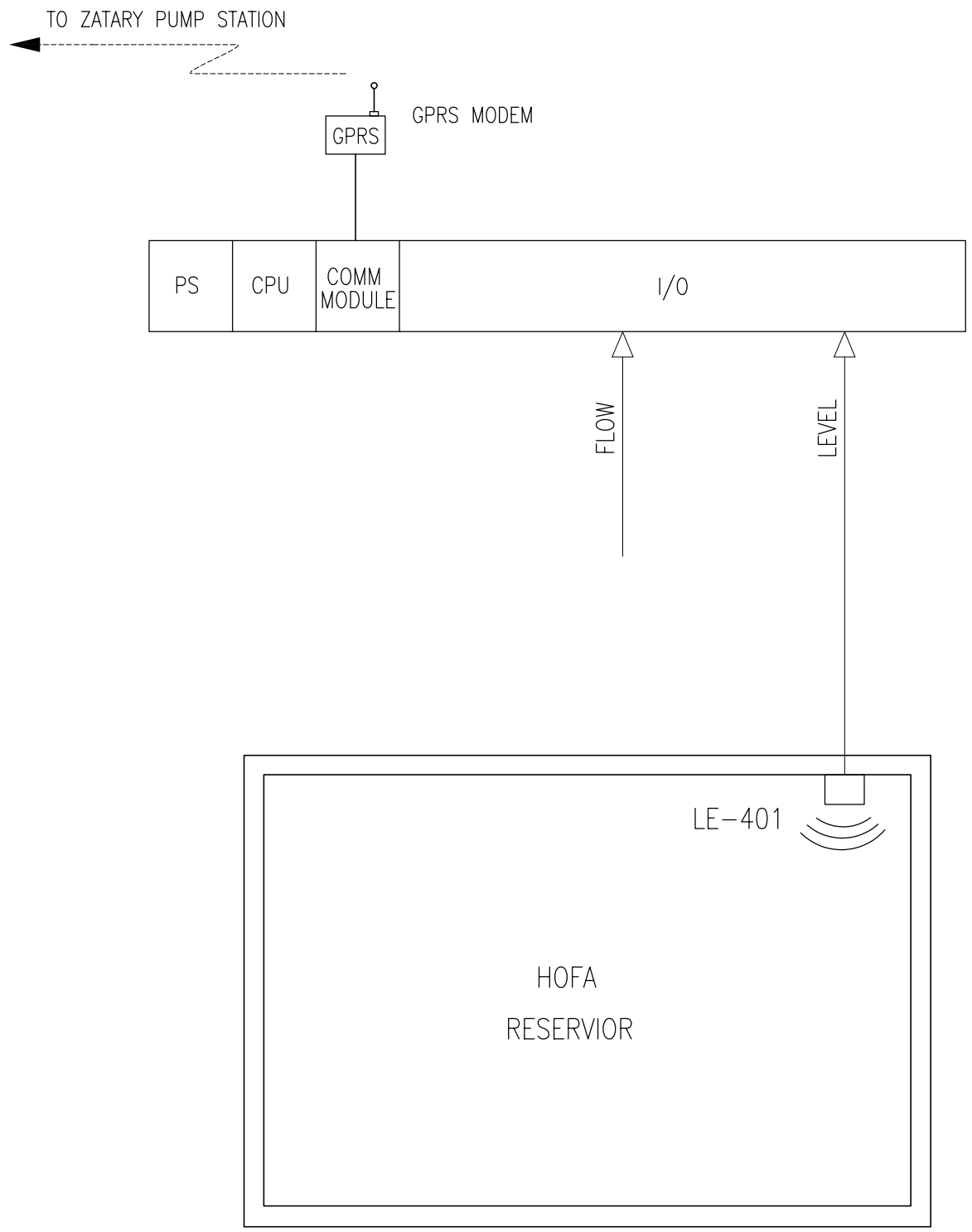

REDUCED SIZE DRAWINGS

REV.	DATE	DRAWN	CHKD	REMARKS

DESIGNED:	CHECKED:	SCALE:
M.Fr.	S.F.	NTS
DRAWN:	APPROVED:	DATE:
M.F.	S.F.	NOV. 2005

CDM
CDM International Inc.

NORTHERN GOVERNORATES WATER TRANSMISSION
Eastern Primary Transmission System

REMOTE PLC DETAILS

PROJECT NO. : 3029-42324

DRAWING NO. : **I-9**

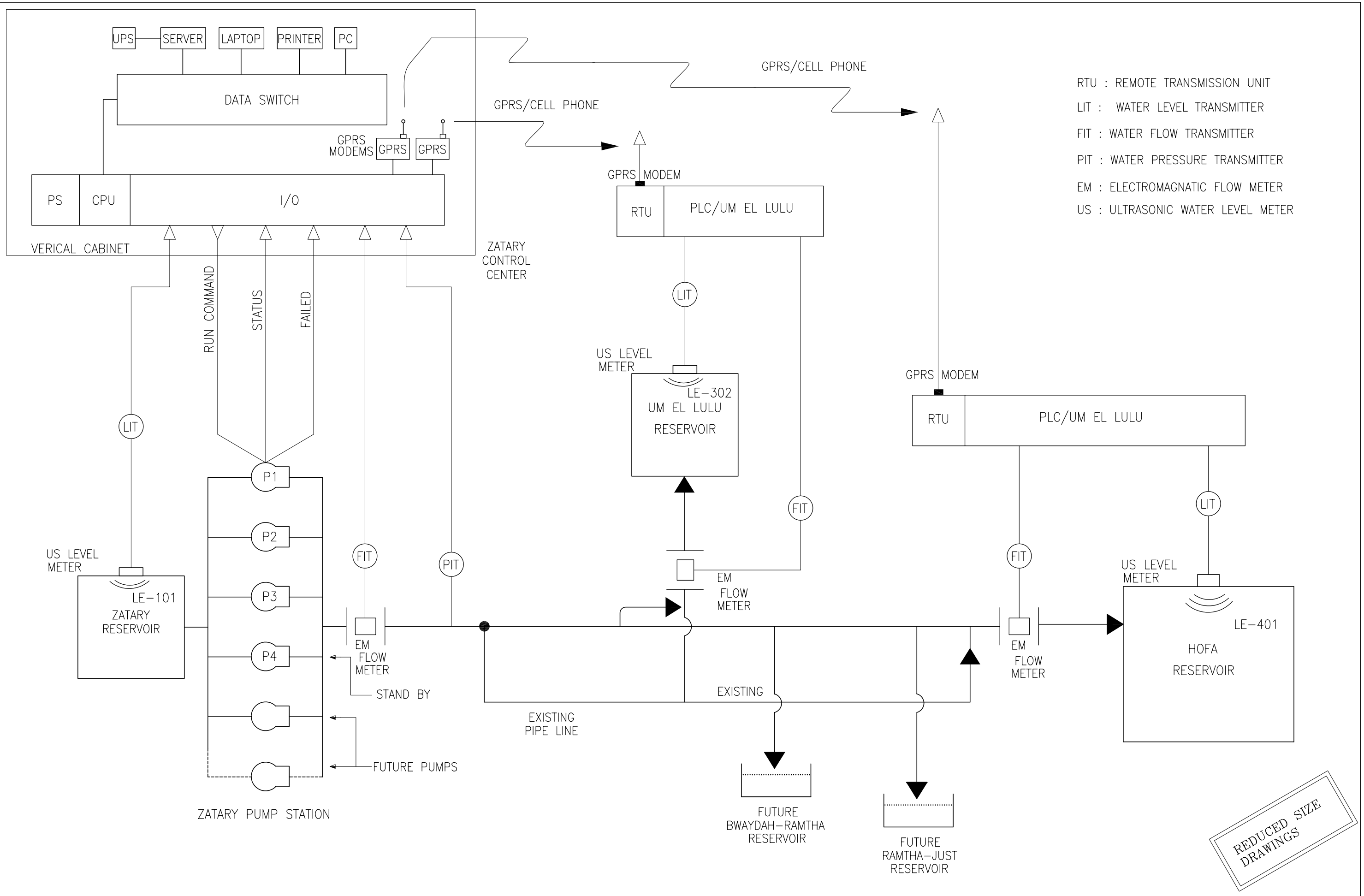

REV.	DATE	DRAWN	CHKD	REMARKS

DESIGNED:	CHECKED:	SCALE:
M.Fr.	S.F.	NTS
DRAWN:	APPROVED:	DATE:
M.F.	S.F.	NOV. 2005

CDM
CDM International Inc.

NORTHERN GOVERNORATES WATER TRANSMISSION
Eastern Primary Transmission System

P & I SCHEMATICS DIAGRAM

PROJECT NO. : 3029-42324

DRAWING NO. : **I-10**

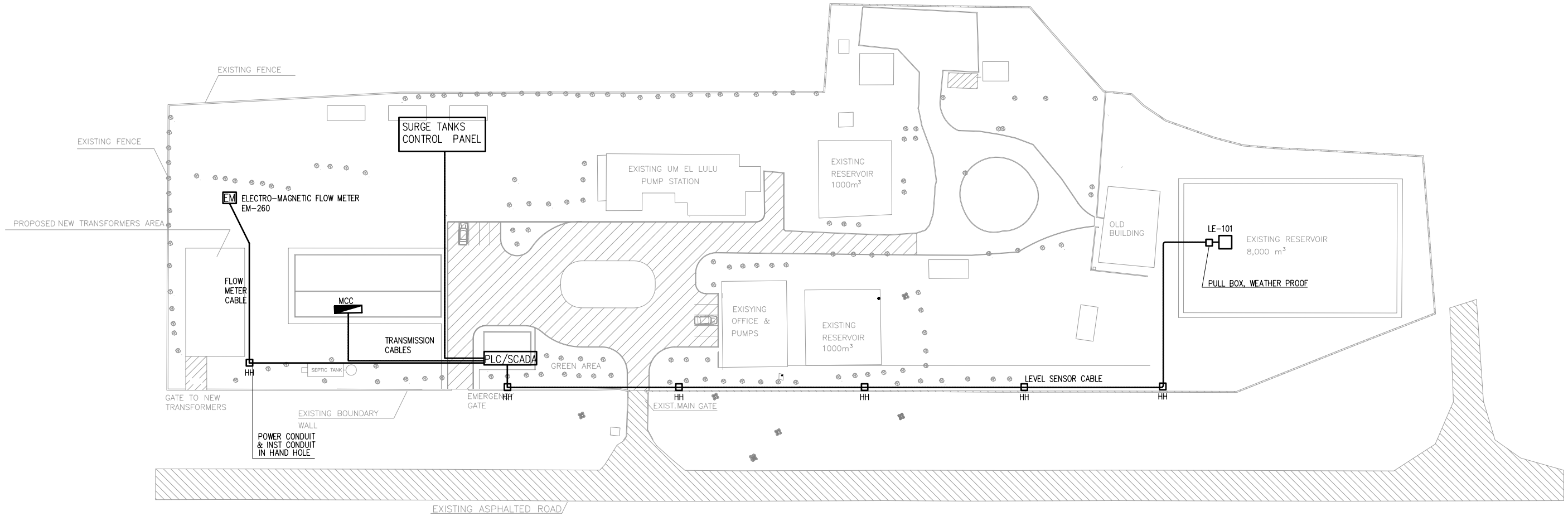

REDUCED SIZE DRAWINGS

REV.	DATE	DRAWN	CHKD	REMARKS

DESIGNED:	CHECKED:	SCALE:
M.Fr.	S.F.	1:50
DRAWN:	APPROVED:	DATE:
M.F.	S.F.	NOV. 2005

CDM
CDM International Inc.

NORTHERN GOVERNORATES WATER TRANSMISSION
Eastern Primary Transmission System

SITE SIGNAL CABLING

PROJECT NO. : 3029-42324

DRAWING NO. : **I-11**