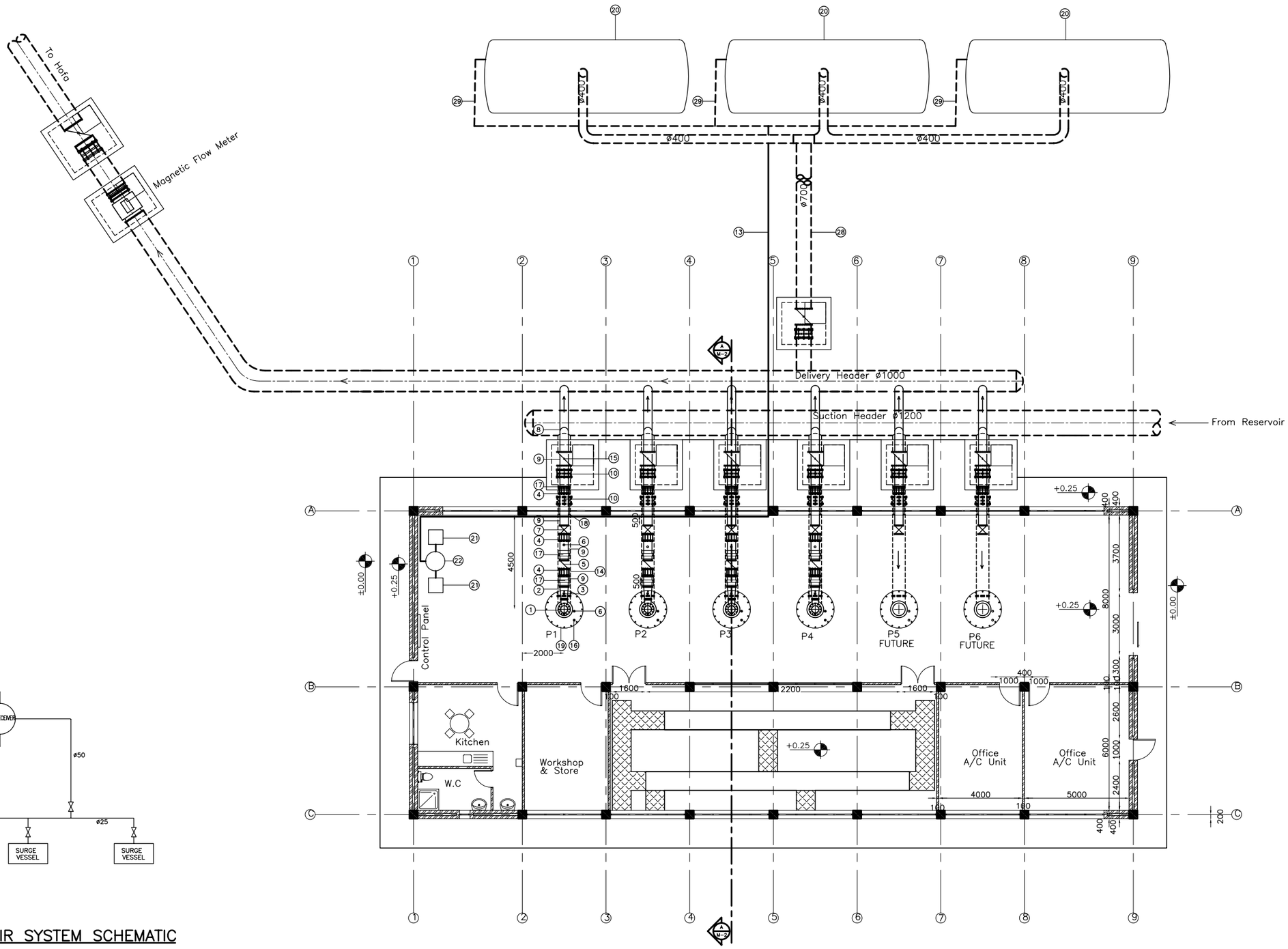

PIPING PLAN

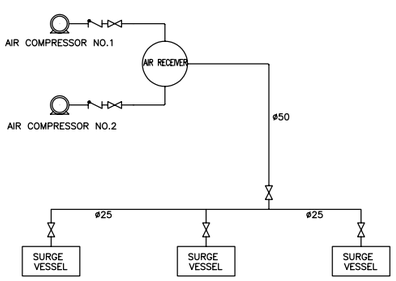

AIR SYSTEM SCHEMATIC

1	Vertical Multistage can Pump.
2	Ø400mm/300mm Eccentric Reducer
3	Ø50mm Air Valve
4	Ø400mm Restrained Flexible Joint.
5	400mm Check Valve
6	Pressure Gauge
7	Ø400mm Gate Valve PN25
8	400 mm 45° Vertical Elbow
9	Pipe Spool Ø400mm
10	Dismantling Joint Ø600mm
11	Pump Can
12	Flow Guide Vane
13	50mm Schedule 40 Steel Air Supply Pipe
14	Ø600mm Pipe Spool
15	Butterfly Valve Ø600mm
16	Can Air Valve 50mm
17	Pipe Support
18	Sleeve
19	Pump Equipment Pad
20	Surge Vessel
21	Air Compressor
22	Air Vessel
23	Number Not Used
24	Number Not Used
25	RC Encasement
26	Suction Header
27	Discharge Header
28	700mm Connection Steel To Surge Tank
29	25mm Schedule 40 Steel Air Supply Pipe

REDUCED SIZE DRAWINGS

METER
2 1 0 4

REV.	DATE	DRAWN	CHKD	REMARKS

DESIGNED: M.M. A.A.
CHECKED: R.L. M.M.
SCALE: 1:100
DRAWN: H.H.
APPROVED: D.D. D.H.
DATE: NOV. 2005

CDM International Inc.

NORTHERN GOVERNORATES WATER TRANSMISSION
Eastern Primary Transmission System

MECHANICAL PIPING PLAN

PROJECT NO. : 3029-42324
DRAWING NO. : **M-1**

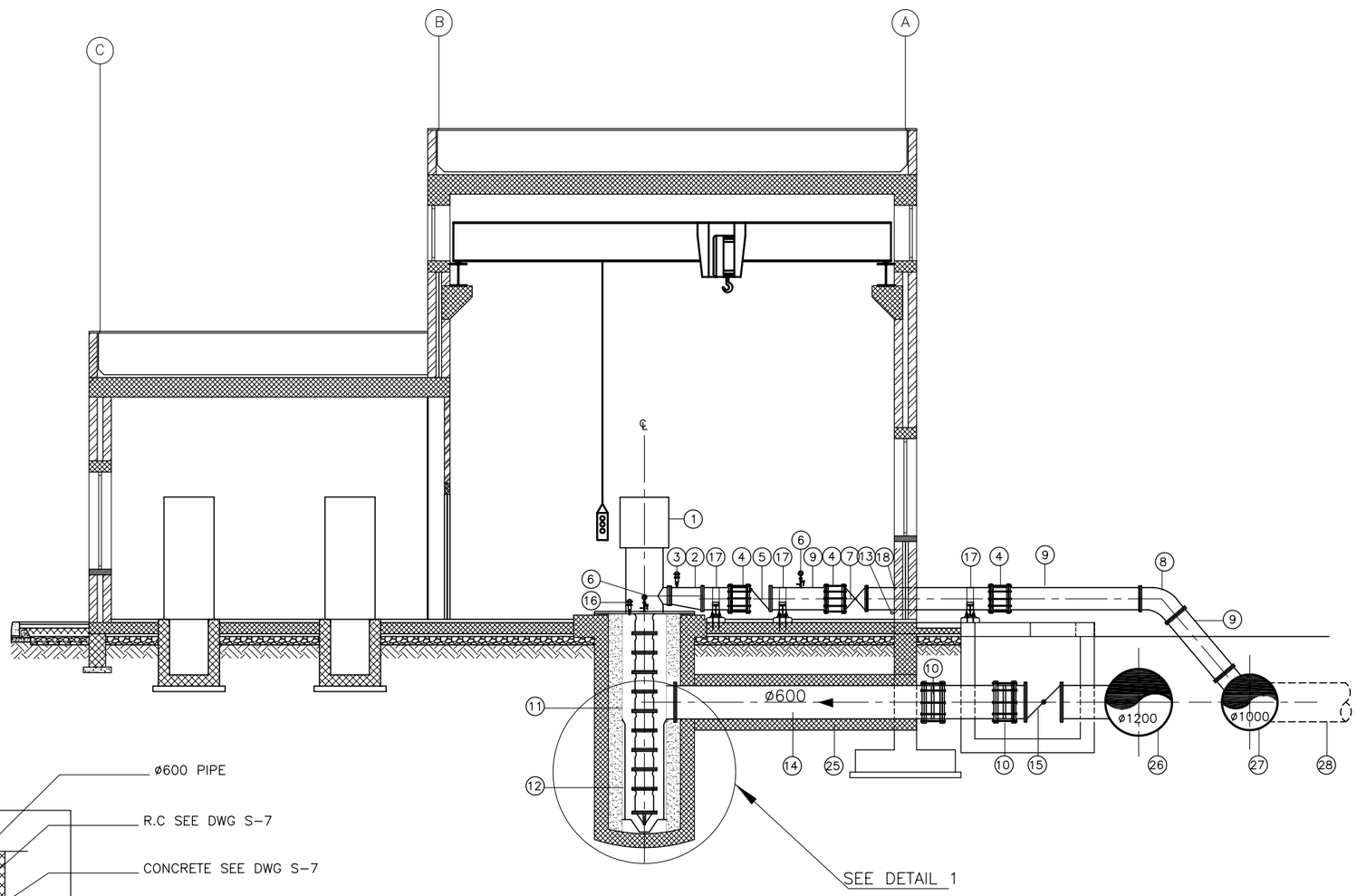

SECTION A/M-1
1:50

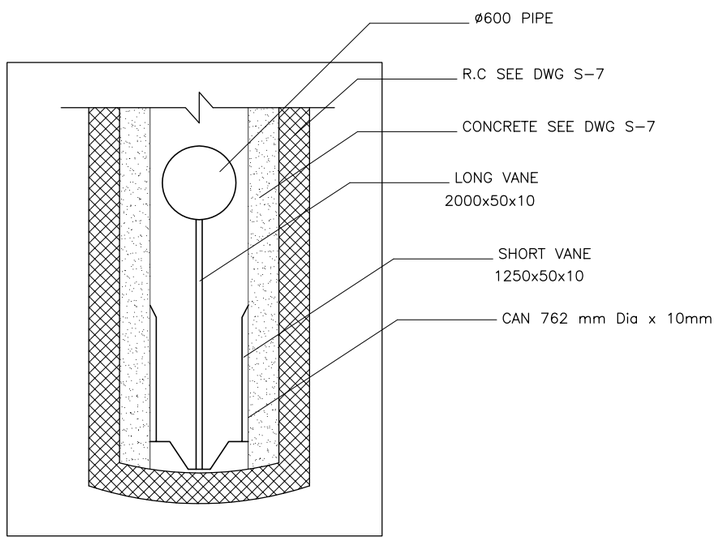

DETAIL 1/—
1:25

1	Vertical Multistage can Pump
2	ø400mm/300mm Eccentric Reducer
3	ø50mm Air Valve
4	ø400mm Restrained Flexible Joint
5	400mm Check Valve
6	Pressure Gauge
7	ø400mm Gate Valve PN25
8	45° Elbow
9	Pipe Spool ø400mm
10	Dismantling Joint ø600mm
11	Pump Can
12	Flow Guide Vane
13	50mm Schedule 40 Steel Air Supply Pipe
14	ø600mm Pipe Spool
15	Butterfly Valve ø600mm
16	Can Air Valve 50mm
17	Pipe Support
18	Sleeve
19	Pump Equipment Pad
25	RC Encasement
26	Suction Header
27	Discharge Header
28	700mm Steel Connection To Surge Tank

REDUCED SIZE DRAWINGS

REV.	DATE	DRAWN	CHKD	REMARKS

DESIGNED:	CHECKED:	SCALE:
M.M. A.A.	R.L.	1:50
DRAWN:	APPROVED:	DATE:
H.H.	D.D.	NOV. 2005

CDM
CDM International Inc.

NORTHERN GOVERNORATES WATER TRANSMISSION
Eastern Primary Transmission System

MECHANICAL PIPING SECTION

PROJECT NO. : 3029-42324

DRAWING NO. : **M-2**

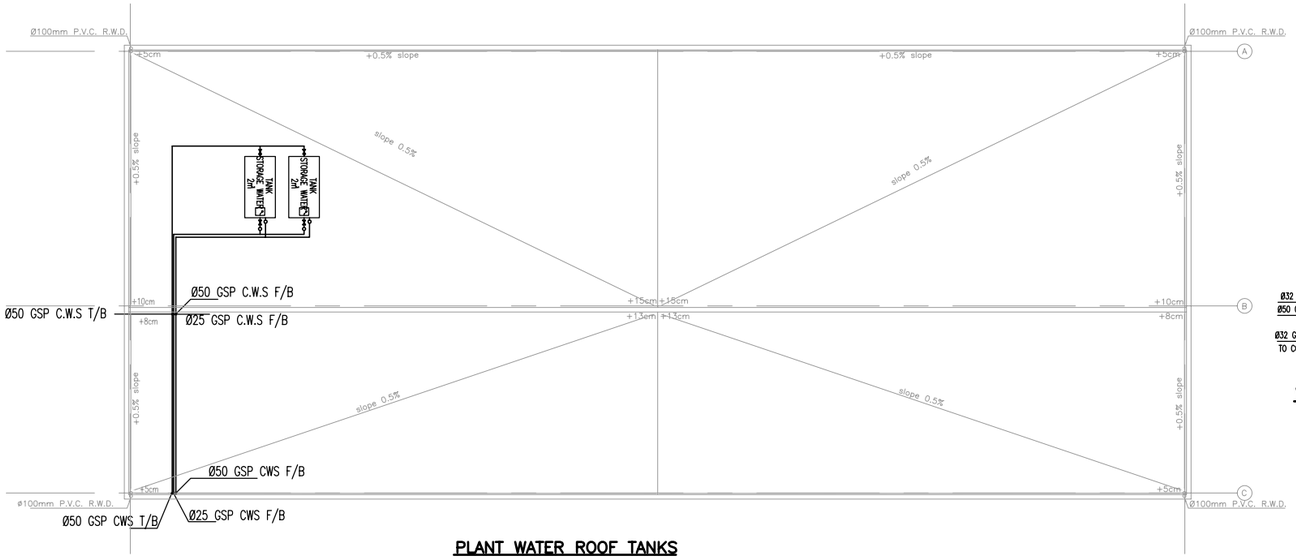

PLANT WATER ROOF TANKS

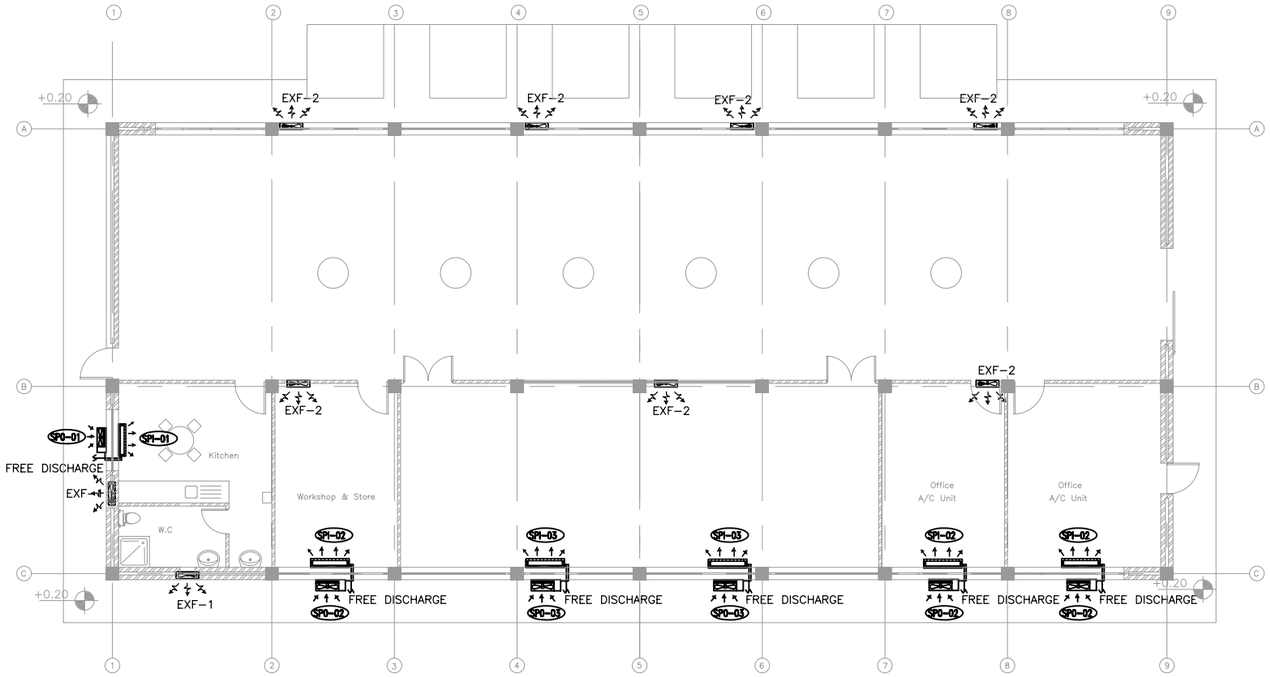

PUMPS BUILDING HVAC PLAN

PART PLAN-PUMP BUILDING

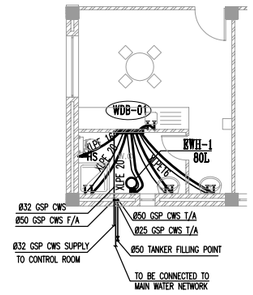

WATER LAYOUT

DRAINAGE LAYOUT

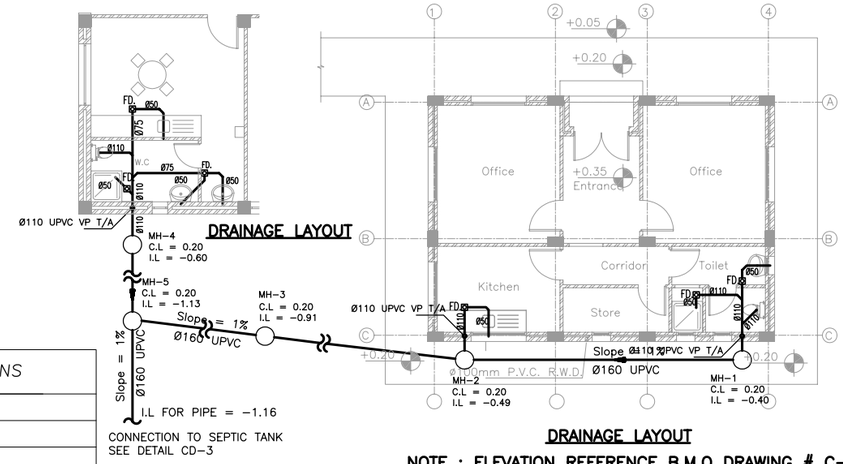

NEW CONTROL BUILDING

DRAINAGE LAYOUT

NOTE : ELEVATION REFERENCE B.M.O DRAWING # C-2

LEGEND & ABBREVIATIONS	
F/A	FROM ABOVE
F/B	FROM BELOW
T/A	TO ABOVE
T/B	TO BELOW
VP	VENT PIPE
DP	DRAIN PIPE
FD	FLOOR DRAIN
CO	CLEAN OUT
CWS	COLD WATER SUPPLY
GSP	GALVANIZED STEEL PIPE
XLPE	CROSS LINKED POLYETHYLENE PIPE
UPVC	UNPLASTIZED POLYVINYL CHLORIDE
WDB	WATER DISTRIBUTION BOX
	GATE VALVE
E.W.H	ELECTRIC WATER HEATER
E.X.F	EXHAUST FAN.
HS	HAND SPRAY
G.L	GROUND LEVEL
C.L	COVER LEVEL
I.L	INVERT LEVEL

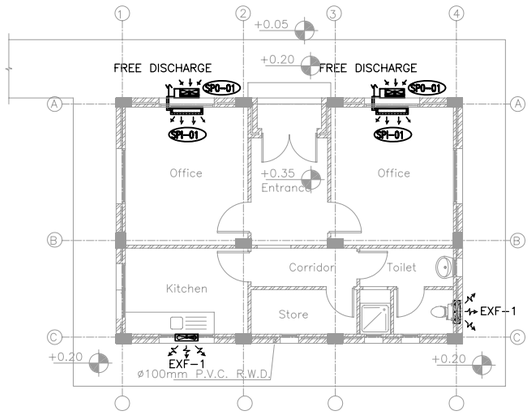

HVAC LAYOUT

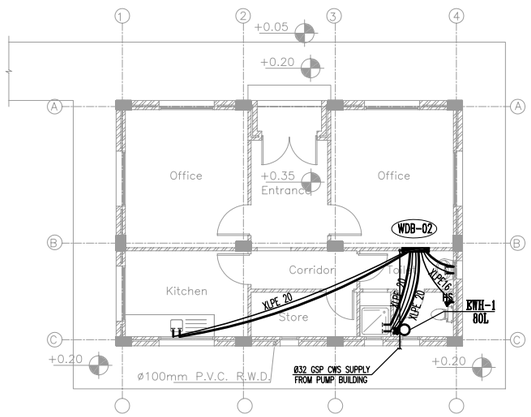

WATER LAYOUT

REDUCED SIZE DRAWINGS

EQUIPMENT SCHEDULE								
	ITEM NO	Q'TY	INDUSTRIAL WALL TYPE	CAPACITY	ELECTRICAL POWER (KW)	ELECTRICAL V / Hz / Ph	LOCATION	REMARKS
EXHAUST FANS	EXF-1	4	WINDOW/WALL TYPE	210 (m^3/hr) AIR FLOW	0.016	220 / 50 / 1	KITCHEN & BATHROOM	WITH GRAVITY LOUVER SHUTTER
	EXF-2	7	INDUSTRIAL WALL TYPE	3630(m^3/hr) AIR FLOW	0.108	220 / 50 / 1	PUPM ROOM	WITH AUTOMATIC LOUVER SHUTTER
ELECTRIC WATER HEATER	EWH-1	2	VERTICAL TYPE	80 LITER WATER STORAGE	1.2	220 / 50 / 1	BATHROOM	COMPLETE WITH NECESSARY ACCESSORIES
A/C UNITS SCHEDULE	SP-1	3	DECORATIVE TYPE COOLING & HEATING	COOLING LOAD 5.3 (kW) / HEATING LOAD 5.4 (kW)	2.2	220 / 50 / 1	RESTROOM & OFFICES	COMPLETE WITH NECESSARY ACCESSORIES
	SP-2	3	DECORATIVE TYPE COOLING & HEATING	COOLING LOAD 7.04 (kW) / HEATING LOAD 7.19(kW)	2.8	220 / 50 / 1	WORKSHOP AND OFFICES	COMPLETE WITH NECESSARY ACCESSORIES
	SP-3	2	DECORATIVE TYPE COOLING & HEATING	COOLING LOAD 10.6(kW) / HEATING LOAD 10.8(kW)	4.6	380 / 50 / 3	MCC ROOM	COMPLETE WITH NECESSARY ACCESSORIES

NOTES: * DATA FOR A/C UNIT ABOVE IS BASED ON: – OUTDOOR DRY BULB TEMP.= 36° C
– INDOOR DRY BULB TEMP.= 24° C

WATER DISTRIBUTION BOX														
BOX. NO.	DISTRIBUTION W.C COLD	W.C HOT	LAVATORY COLD	LAVATORY HOT	SINK COLD	SINK HOT	SHOWER COLD	SHOWER HOT	TOTAL COLD	TOTAL HOT	QTY.	MANIFOLD SIZE (mm) COLD	MANIFOLD SIZE (mm) HOT	BOX SIZE (mm)
WDB-01	1	–	2	2	1	1	1	1	5	4	1	Ø25	Ø20	600X650X110
WDB-02	1	–	1	1	1	1	1	1	4	3	1	Ø25	Ø20	600X650X110

REV.	DATE	DRAWN	CHKD	REMARKS

DESIGNED: R.D. | CHECKED: A.A. | SCALE: NTS
DRAWN: CC CAD | APPROVED: R.L. | DATE: NOV. 2005

CDM International Inc.

NORTHERN GOVERNORATES WATER TRANSMISSION
Eastern Primary Transmission System

PROJECT NO. : 3029-42324

PLUMBING AND HVAC LAYOUT

DRAWING NO. : **M-3**

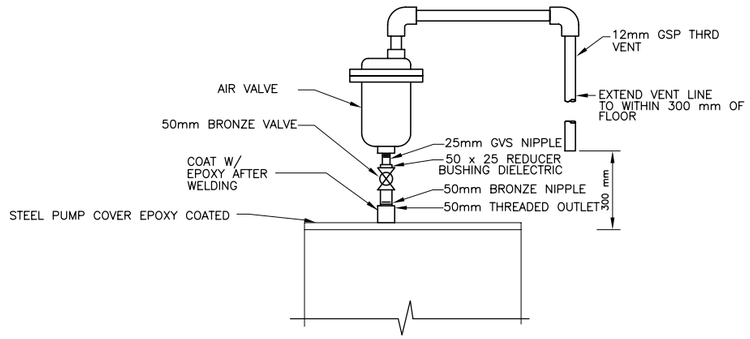

AIR / VACUUM RELEASE VALVE CONNECTION TO PUMP COVER

NTS

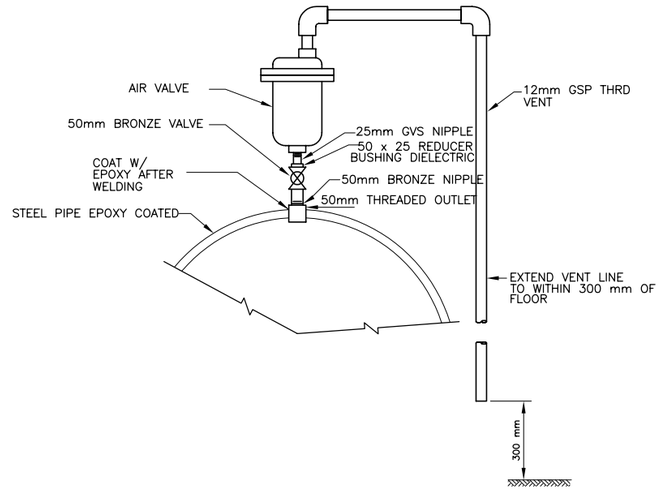

AIR / VACUUM RELEASE VALVE CONNECTION TO PIPE

NTS

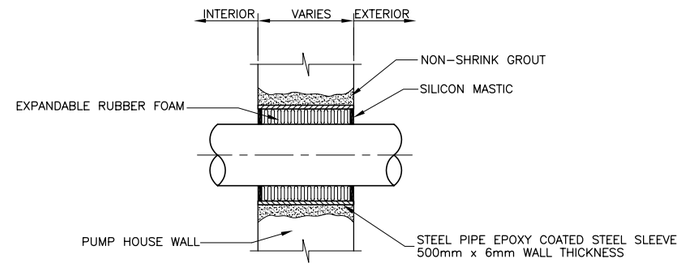

TYPICAL PIPE SLEEVE – THROUGH WALL

NTS

NOTES

1. WHEN SUPPORTING PIPE & FLANGE ALTERNATELY ON THE SAME LINE, CONCRETE PIERS FOR PIPE SUPPORTS SHALL ALL HAVE THE SAME DIMENSIONS 'H' FOR FLANGE SUPPORT.
2. GALVANIZE AFTER FABRICATION.
3. WHERE UTILIZED UNDER BENDS, OR OTHERWISE SKEWED, DIMENSIONS TO BE INCREASED & SADDLE FABRICATED AS ACCEPTABLE TO ENGINEER.
4. PROVIDE 6 mm FILLET WELD ON BOTH SIDES OF ALL MATING SURFACES.
5. HIGHT OF THE CONCRETE PIER FOR THE PIPE SUPPORT INSIDE THE PUMP BUILDING SHALL BE AS SHOWN ON M–2.

DIMENSIONS IN mm													
NOMINAL PIPE SIZE						SUPPORTING							
						PIPE				FLANGE			
	'A'	'B'	'C'	'D'	'E'	'F'	'G'	'H'	'J'	'F'	'G'	'H'	'J'
350	125	125	10	16	6	200	325	450	450	275	450	575	450
400	125	125	10	16	6	225	375	525	450	300	500	650	450
450	125	125	10	16	6	250	400	550	450	325	525	650	450

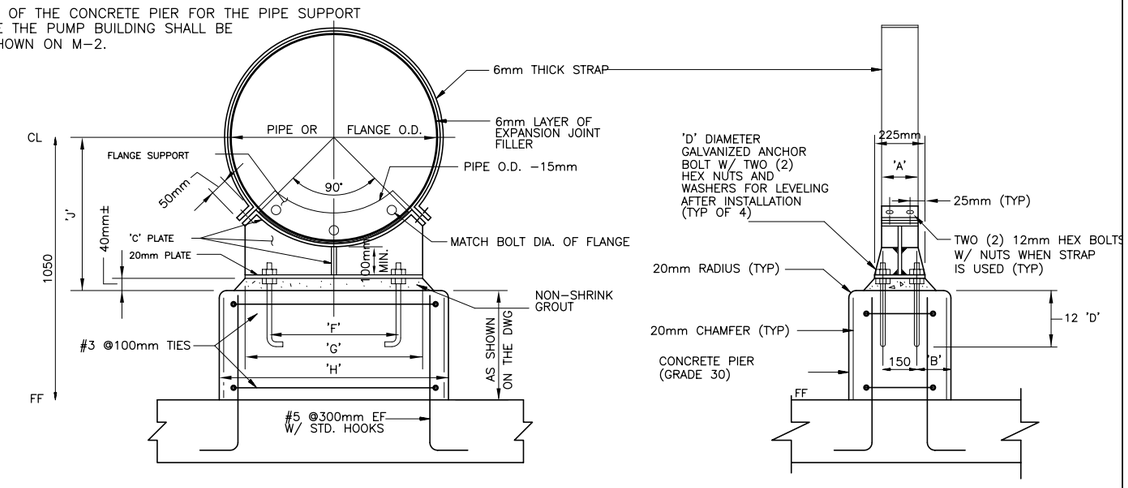

SADDLE PIPE SUPPORT WITH STRAP

NTS

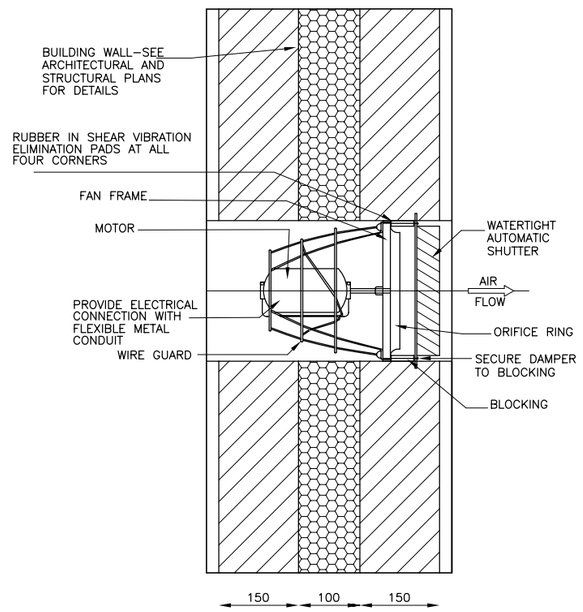

PUMP ROOM EXHAUST FAN DETAIL

NTS

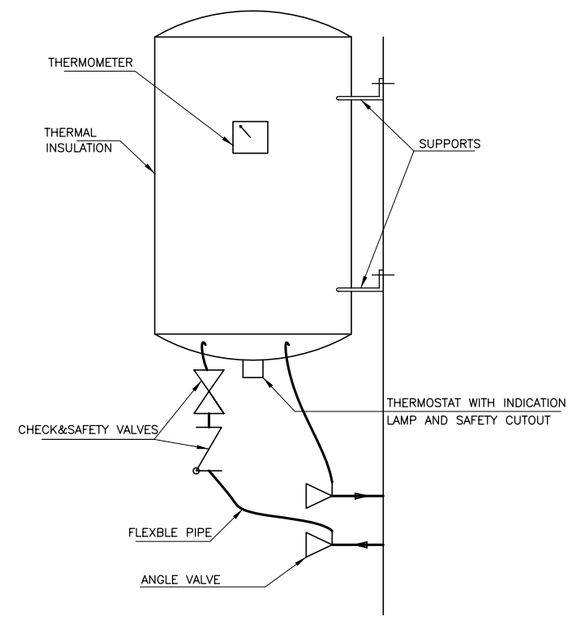

ELECTRIC WATER HEATER

NTS

REDUCED SIZE DRAWINGS

REV.	DATE	DRAWN	CHKD	REMARKS

DESIGNED:	CHECKED:	SCALE:
A.A.	M.M.	NTS
DRAWN:	APPROVED:	DATE:
H.H.	R.L.	NOV. 2005

CDM International Inc.

NORTHERN GOVERNORATES WATER TRANSMISSION
Eastern Primary Transmission System

MECHANICAL DETAILS

PROJECT NO. : 3029-42324

DRAWING NO. : **MD-1**

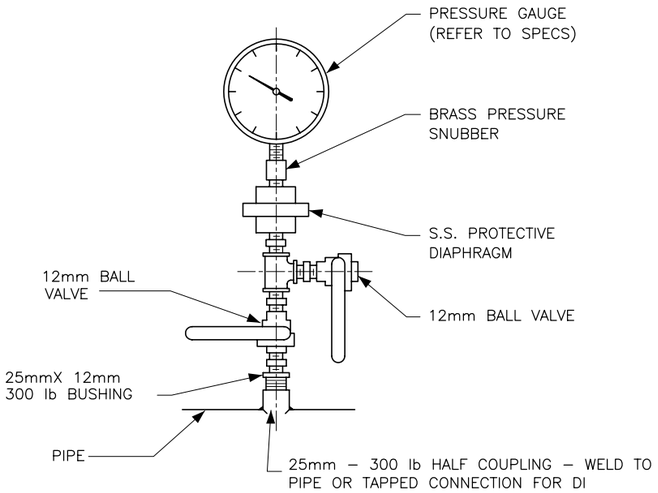

NOTE:
USE DIAPHRAGM SEALS AND VALVES FOR ALL CHEMICALS, SEWAGE, SLUDGE AND OTHER LIQUIDS CONTAINING SOLIDS

PRESSURE GAUGE
NTS

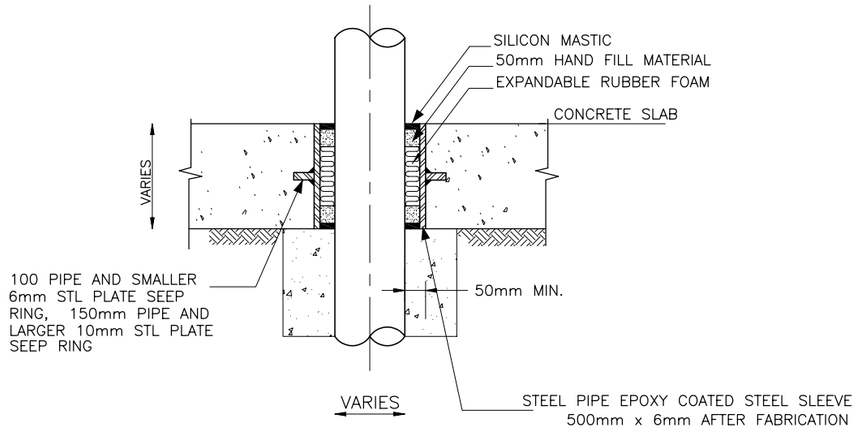

TYPICAL CONCRETE SLAB ON GRADE PIPE PENETRATION
NTS

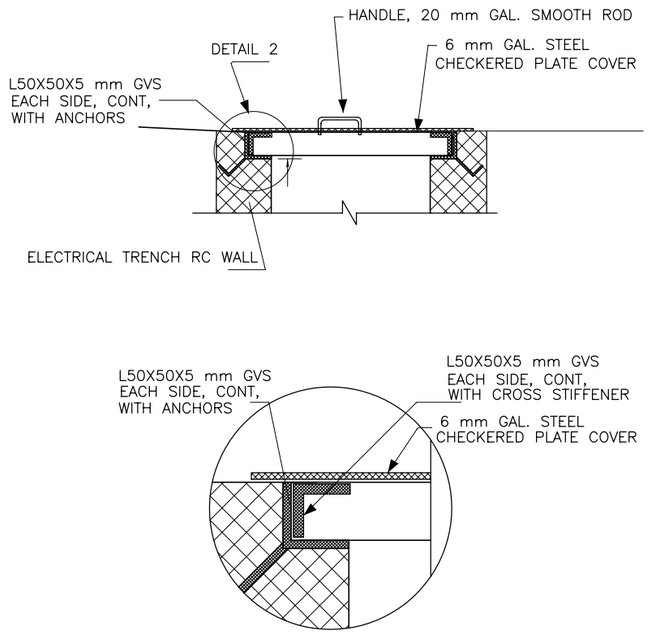

TYPICAL SECTION IN ELECTRICAL TRENCH COVER

DETAIL 2 / NTS

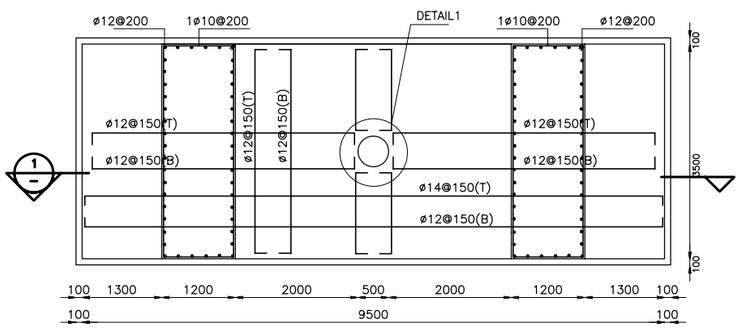

FOUNDATION PLAN FOR SURGE VESSEL

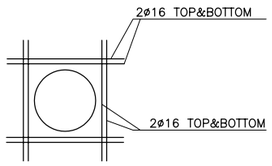

PLAN

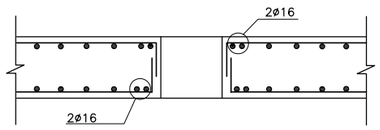

SECTION

ADDITIONAL STEEL FOR OPENING IN SLAB

DETAIL 1 / NTS

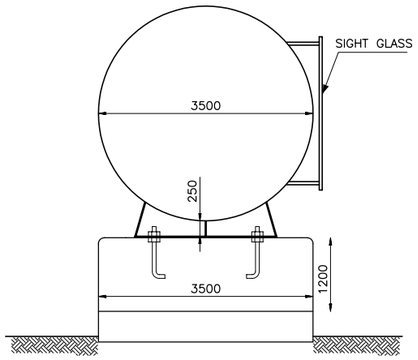

FRONT VIEW

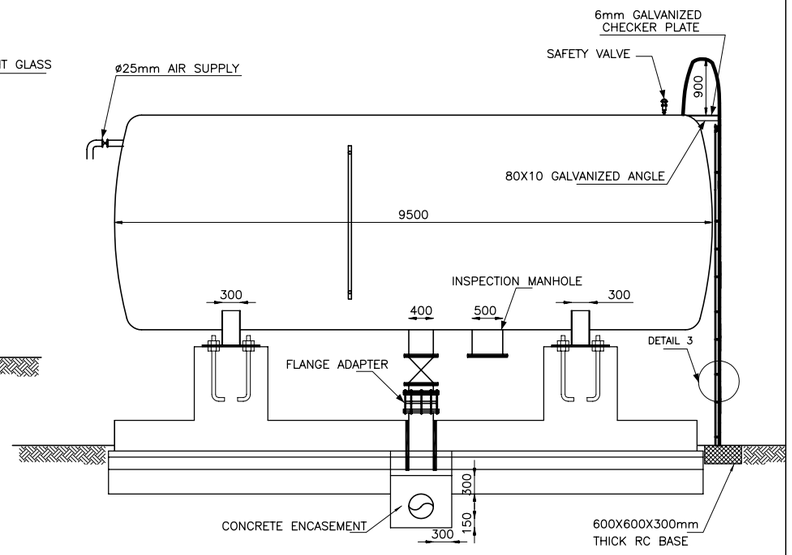

SIDE VIEW

TYPICAL SURGE VESSEL
NTS

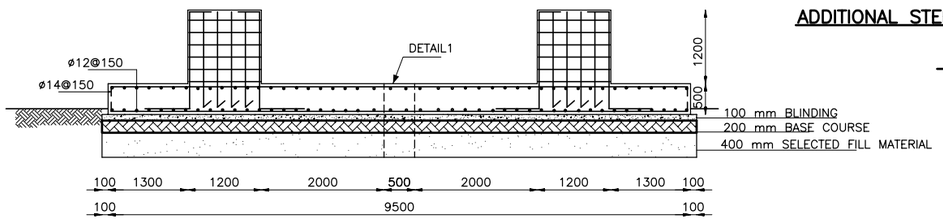

SECTION 1 / NTS

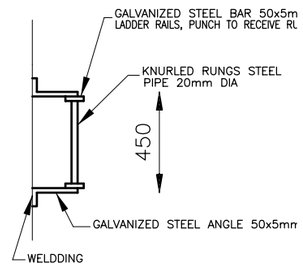

DETAIL 3 / NTS

REDUCED SIZE DRAWINGS

REV.	DATE	DRAWN	CHKD	REMARKS

DESIGNED:	CHECKED:	SCALE:
A.A. A.O.	M.M.	1:50
DRAWN:	APPROVED:	DATE:
N.K.	R.L.	NOV. 2005

CDM International Inc.

NORTHERN GOVERNORATES WATER TRANSMISSION
Eastern Primary Transmission System

MECHANICAL DETAILS

PROJECT NO. : 3029-42324

DRAWING NO. : **MD-2**