NOTE:

1- ø12 @200mm c/c MEANS ø12mm AT 200mm FROM CENTER TO CENTER.

2- ALL PIPE PENETTRATION THROUGH MANHOLE WALLS SHOULD HAVE PUDDLE FLANGES AND ADDITIONAL REINFORCMENT ON BOTH SIDES OF THE PUDDLE FLANGES , ADDITIONAL STEEL SHOULD BE AS SHOWN IN DETAIL 2.

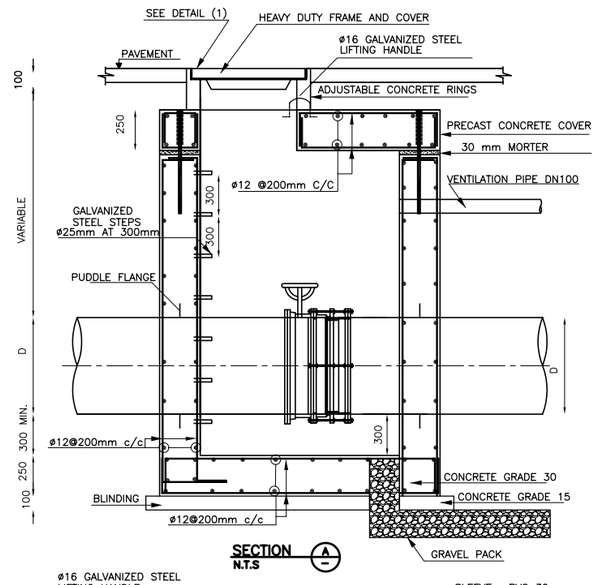

SECTION A
N.T.S

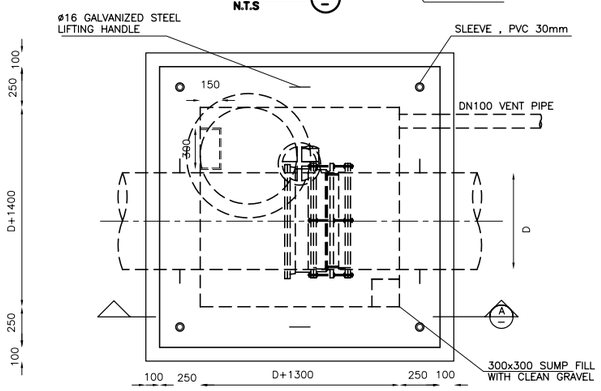

BUTTERFLY VALVE VAULT IN ASPHALT-PLAN
VALVE SIZE = 600-1000mm DIA.

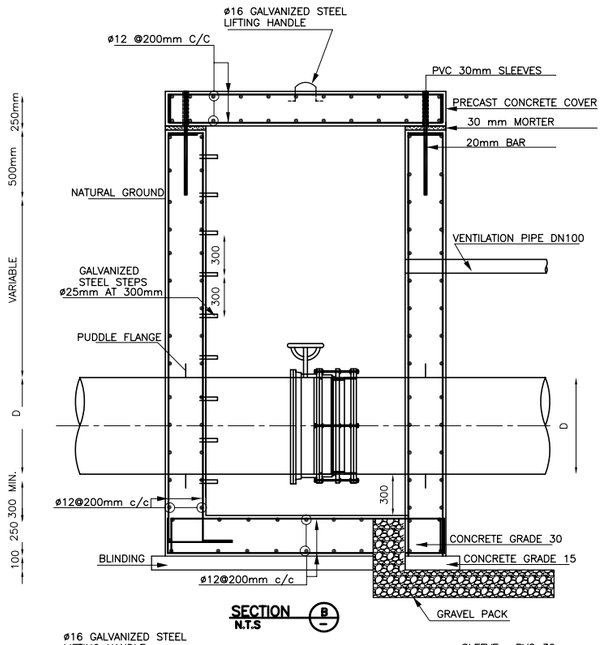

SECTION B
N.T.S

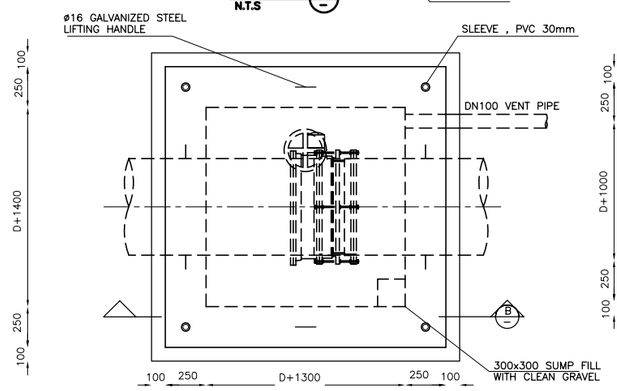

BUTTERFLY VALVE VAULT IN NATURAL GROUND-PLAN
VALVE SIZE = 600-1000mm DIA.

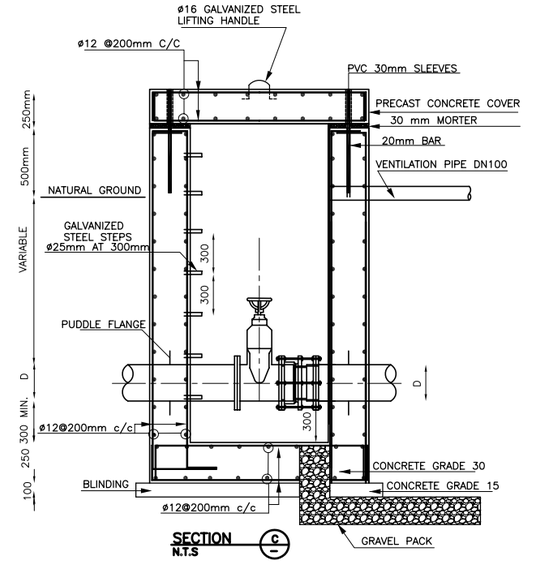

SECTION C
N.T.S

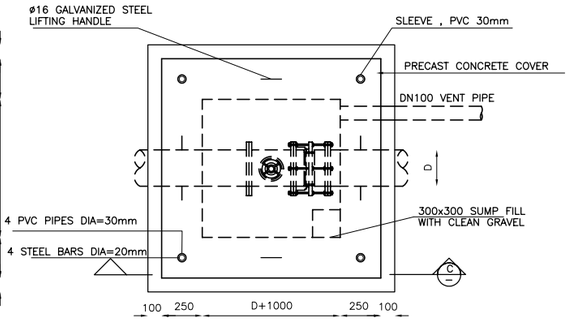

GATE VALVE VAULT IN NATURAL GROUND-PLAN
VALVE SIZE = 100-400mm DIA.

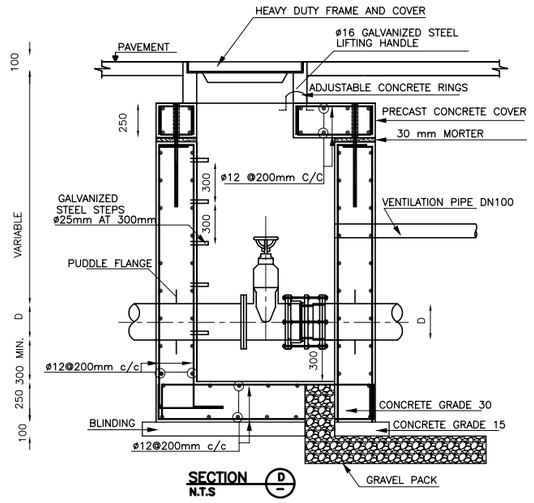

SECTION D
N.T.S

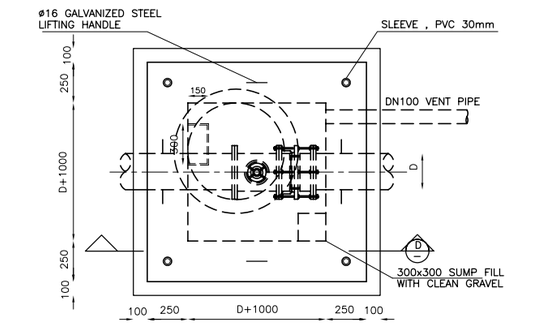

GATE VALVE VAULT IN ASPHALT-PLAN
VALVE SIZE = 100-500mm DIA.

1- C = TENSION DEVELOPMENT LENGTH: PROVIDE STD HOOK IF FULL DEVELOPMENT LENGTH IS NOT POSSIBLE
2- REINFORCING STEEL IS TO BE CARRIED ACROSS ALL CONSTRUCTION JOINTS
3- DETAIL IS TYP FOR ALL OPENINGS GREATER THAN 250 mm IN CONCRETE WALLS AND SLABS UNLESS OTHERWISE NOTED
4- EXTRA BARS ARE NOT REQUIRED AT AN OPENING EDGE PARALLEL TO AND WITHIN 150 mm OF A WALL OR BEAM

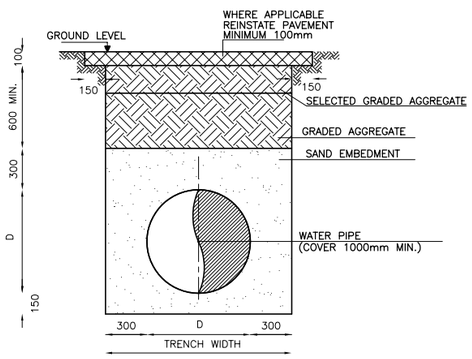

PIPES ALONG ROADS

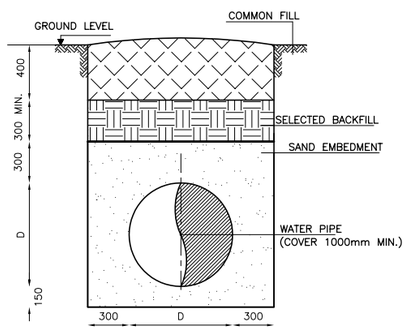

PIPES ALONG NATURAL GROUND

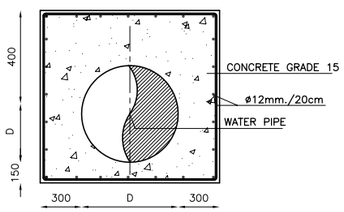

TYPICAL PIPE ENCASEMENT

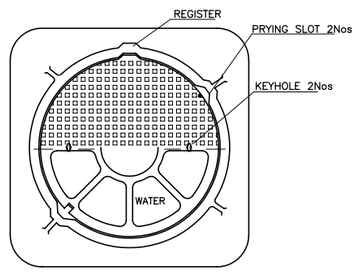

DETAIL 1
N.T.S

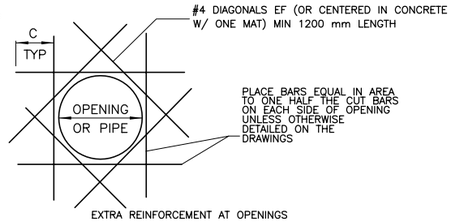

DETAIL 2
N.T.S

REDUCED SIZE DRAWINGS

REV.	DATE	DRAWN	CHKD	REMARKS

DESIGNED:	CHECKED:	SCALE:
	M.M.	AS SHOWN
DRAWN:	APPROVED:	DATE:
N.K.	D.D.	NOV. 2005

CDM International Inc.

NORTHERN GOVERNORATES WATER TRANSMISSION
Eastern Primary Transmission System

ISOLATION VALVES & PIPE TRENCH DETAILS

PROJECT NO. : 3029-42324

DRAWING NO. : PD-1

NOTE:

1– ø12 @200mm c/c MEANS ø12mm AT 200mm FROM CENTER TO CENTER.

2– ALL PIPE PENETRATION THROUGH MANHOLE WALLS SHOULD HAVE PUDDLE FLANGES AND ADDITIONAL REINFORCMENT ON BOTH SIDES OF THE PUDDLE FLANGES, ADDITIONAL STEEL SHOULD BE AS SHOWN IN DWG–PD1 DETAIL 2.

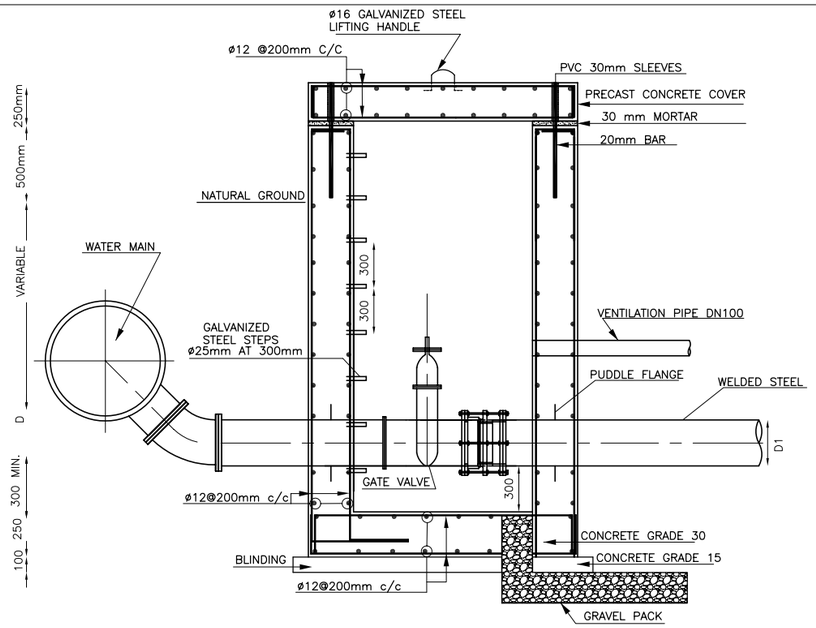

SECTION A
NTS

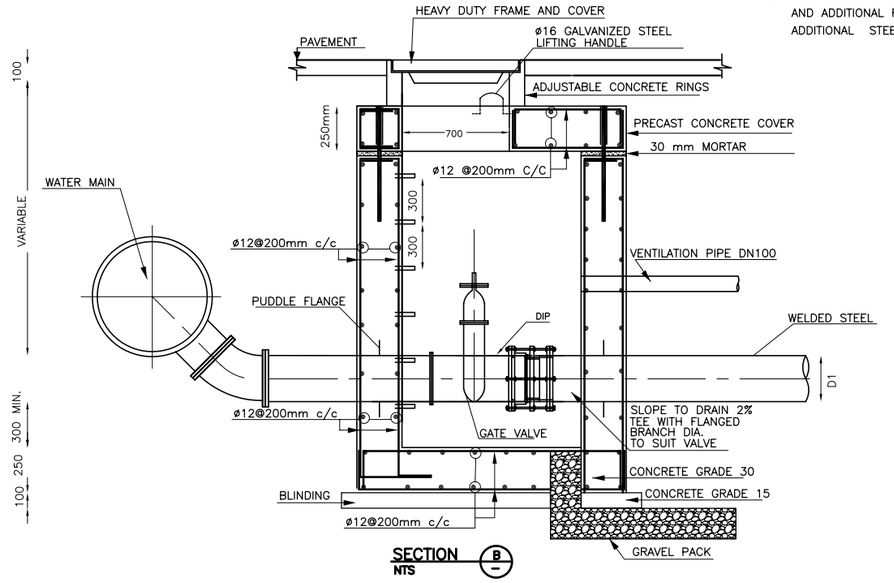

SECTION B
NTS

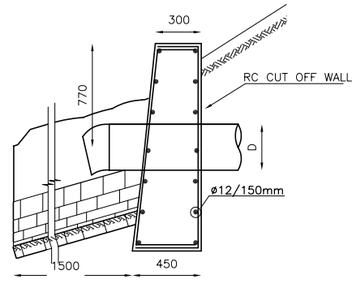

WASHOUT PIPE OUTLET

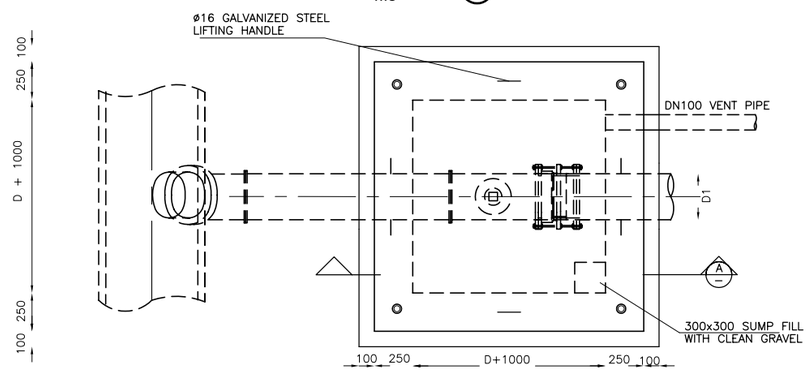

WASHOUT VAULT PLAN & SECTIONS IN NATURAL GROUND
VALVE SIZE = 300–400mm DIA.

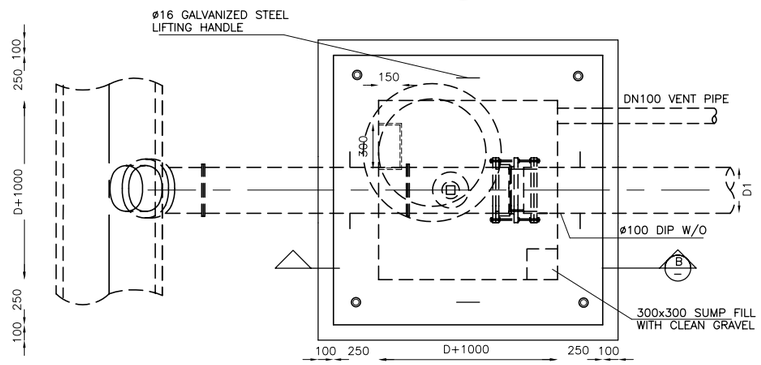

WASHOUT VAULT PLAN & SECTIONS IN ASPHALT
VALVE SIZE = 300–400mm DIA.

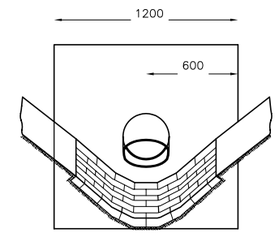

ELEVATION
NTS

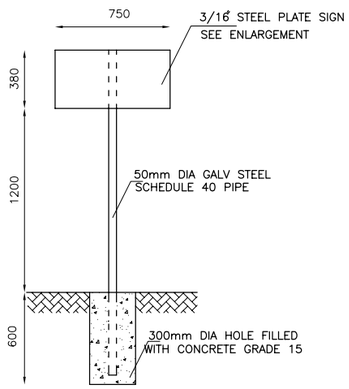

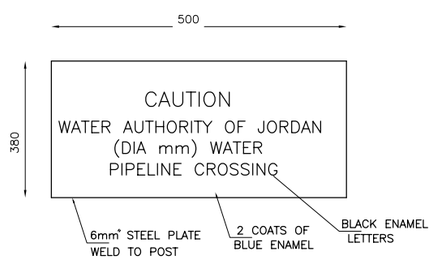

NOTES:
1. SIGN SHALL BE PAINTED BY A COMMERCIAL SIGN PAINTER.
2. CONTRACTOR SHALL FURNISH & INSTALL MARKER SIGNS AT APPROXIMATELY 500M INTERVALS AT LOCATIONS TO BE DETERMINED BY THE OWNER. SIGNS SHALL BE CONSIDERED PART OF THE COST OF THE WATER LINE.

PIPELINE MARKER SIGN

WASHOUT SCHEDULE

MAIN LINE DIA. (mm)	WASHOUT DIA. (mm)
1000	400
900	400
700	300

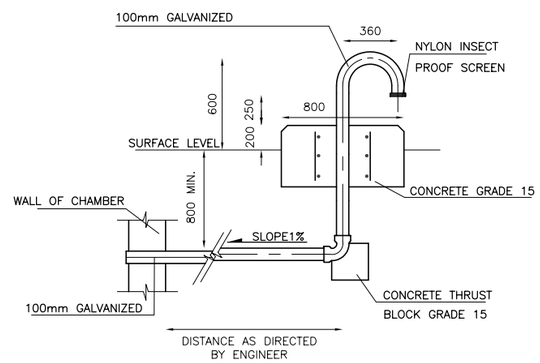

CHAMBER VENTILATION PIPE DETAILS
NTS

REDUCED SIZE DRAWINGS

REV.	DATE	DRAWN	CHKD	REMARKS

DESIGNED:	CHECKED:	SCALE:
	M.M.	AS SHOWN
DRAWN:	APPROVED:	DATE:
N.K.	D.D.	NOV. 2005

CDM International Inc.

NORTHERN GOVERNORATES WATER TRANSMISSION
Eastern Primary Transmission System

WASHOUTS DETAILS & PIPELINE MARKER DETAILS

PROJECT NO. : 3029-42324

DRAWING NO. : PD-2

NOTE:

1- ø12 @200mm c/c MEANS ø12mm AT 200mm FROM CENTER TO CENTER.

2- ALL PIPE PENETRATION THROUGH MANHOLE WALLS SHOULD HAVE PUDDLE FLANGES AND ADDITIONAL REINFORCMENT ON BOTH SIDES OF THE PUDDLE FLANGES , ADDITIONAL STEEL SHOULD BE AS SHOWN IN DWG-PD1 DETAIL 2.

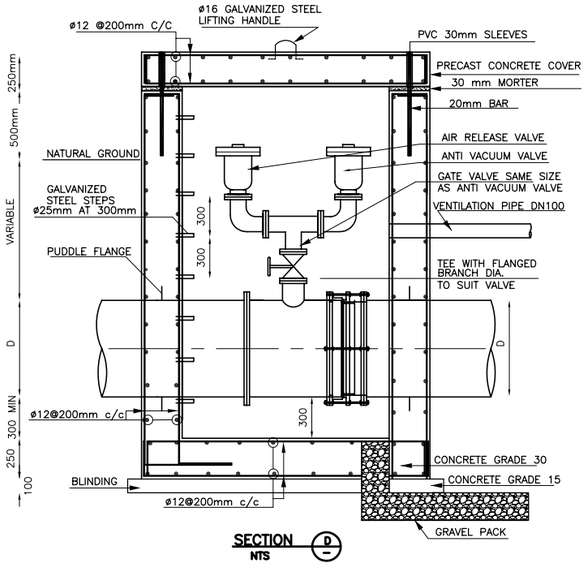

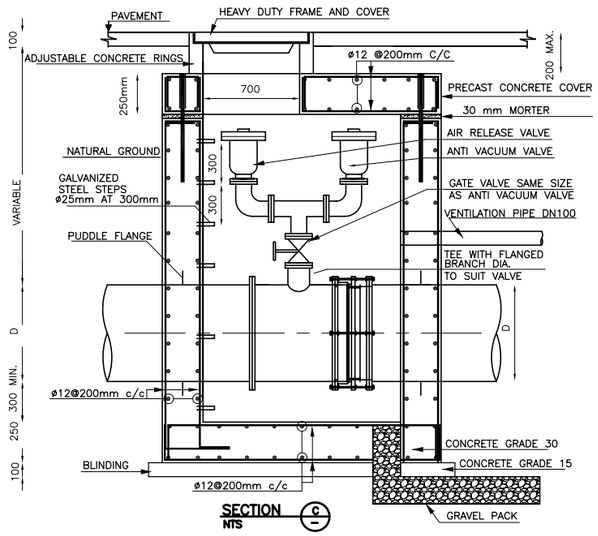

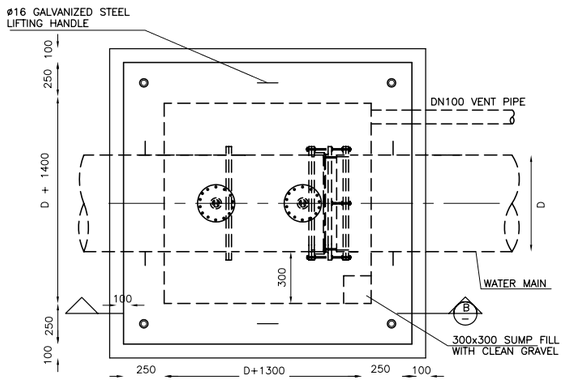

COMBINATION VALVE VAULT IN NATURAL GROUND

VALVE SIZE = 150-250mm DIA.

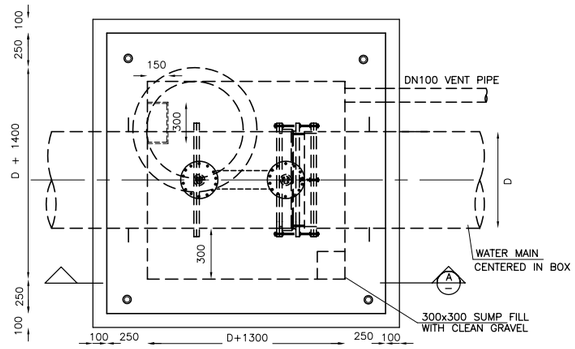

COMBINATION VALVE VAULT IN NATURAL GROUND

VALVE SIZE = 150-250mm DIA.

COMBINATION VALVE SCHEDULE

ANTI VACUUM VALVE		AIR RELEASE VALVE	
MAIN LINE DIA. (mm)	VALVE SIZE (mm)	WORKING PRESSURE (bar)	ORFICE SIZE (mm)
1000	100	0-10	16
900	100	10-16	11
700	100	ABOVE 16	9.5

REDUCED SIZE DRAWINGS

REV.	DATE	DRAWN	CHKD	REMARKS	DESIGNED:	CHECKED: M.M.	SCALE: AS SHOWN	CDM International Inc.	NORTHERN GOVERNORATES WATER TRANSMISSION Eastern Primary Transmission System	PROJECT NO.: 3029-42324
					DRAWN: N.K.	APPROVED: D.D.	DATE: NOV. 2005		COMBINATION "AIR RELEASE AND ANTI VACUUM" VALVE DETAILS	DRAWING NO.: PD-3

GENERAL NOTE:
CONCRETE FOR THRUST BLOCKS SHALL BE CLASS III
EXCEPT FOR REDUCERS WHICH SHALL BE CLASS I

RESTRAINED LENGTH FOR TRUST RESISTING IN BOTH SIDES OF BENDS

DIAMETER mm	Degree °	PN 16 m	PN 25 m
600	11.25	8	12
	22.5	15	23
	45	26	40
	90	42	65
700	11.25	9	14
	22.5	17	26
	45	30	46
	90	48	74
900	11.25	11	18
	22.5	21	33
	45	37	58
	90	60	93
1000	11.25	12	19
	22.5	23	36
	45	41	63
	90	65	102

DIMENSIONS OF THRUST BLOCKS FOR REDUCERS

ENCOUNTERED SOIL TYPE	Silty Clay						Sandy Clay						Bed Rock					
DIAMETER mm	PN 16			PN 25			PN 16			PN 25			PN 16			PN 25		
	A m	B m	H m	A m	B m	H m	A m	B m	H m	A m	B m	H m	A m	B m	H m	A m	B m	H m
1000/900	2.00	0.30	1.70	2.00	0.30	1.70	2.00	0.30	1.70	2.00	0.30	1.70	2.00	0.30	1.70	2.00	0.30	1.70
900/700	1.90	0.30	1.60	1.90	0.30	1.60	1.90	0.30	1.60	1.90	0.30	1.60	1.90	0.30	1.60	1.90	0.30	1.60

NOTE: THE TRENCH BACKFILL BEHIND ANY REDUCER FOR 10m LENGTH SHALL BE MADE OF WELL GRADED MATERIAL AND COMPACTED TO 95% ASTM D 1557

DIMENSIONS OF THRUST BLOCKS FOR END CAPS

ENCOUNTERED SOIL TYPE	Silty Clay						Sandy Clay						Bed Rock					
DIAMETER mm	PN 16			PN 25			PN 16			PN 25			PN 16			PN 25		
	A m	B m	H m	A m	B m	H m	A m	B m	H m	A m	B m	H m	A m	B m	H m	A m	B m	H m
100	0.30	0.60	0.50	0.30	0.70	0.60	0.10	0.30	0.30	0.20	0.40	0.30	0.10	0.30	0.20	0.20	0.40	0.20
150	0.40	0.90	0.70	0.50	1.10	0.90	0.20	0.50	0.40	0.20	0.60	0.50	0.20	0.40	0.30	0.20	0.40	0.40
600	1.40	3.40	2.80	1.80	4.20	3.50	0.60	1.80	1.40	1.00	2.50	1.50	0.50	1.50	1.00	0.60	1.70	1.30

DIMENSIONS OF THRUST BLOCKS FOR TEES

ENCOUNTERED SOIL TYPE	Silty Clay						Sandy Clay						Bed Rock					
DIAMETER mm	PN16			PN25			PN16			PN25			PN16			PN25		
	A m	B m	H m	A m	B m	H m	A m	B m	H m	A m	B m	H m	A m	B m	H m	A m	B m	H m
100	0.50	0.90	0.70	0.60	1.10	0.80	0.30	0.50	0.40	0.30	0.60	0.40	0.20	0.40	0.30	0.20	0.50	0.30
150	0.60	1.30	0.90	0.80	1.60	1.10	0.30	0.70	0.50	0.40	0.80	0.60	0.20	0.50	0.40	0.30	0.60	0.50
200	0.70	1.60	1.20	0.90	2.00	1.50	0.30	0.80	0.60	0.40	1.00	0.80	0.20	0.70	0.50	0.30	0.80	0.60
300	0.90	2.40	1.70	1.20	3.00	2.10	0.30	1.20	0.90	0.50	1.50	1.10	0.20	1.00	0.70	0.30	1.20	0.90
400	1.90	3.10	2.30	2.30	3.90	2.80	1.10	1.60	1.20	1.30	2.00	1.40	0.90	1.20	0.90	1.10	1.50	1.10
600	2.70	4.60	3.30	3.30	5.70	4.10	1.60	2.30	1.70	1.80	2.90	2.10	1.30	1.80	1.30	1.50	2.30	1.60

DIMENSIONS OF THRUST BLOCKS FOR BENDS

ENCOUNTERED SOIL TYPE		Silty Clay						Sandy Clay						Bed Rock					
DN mm	° Degree	PN16			PN25			PN16			PN25			PN16			PN25		
		A m	B m	H m	A m	B m	H m	A m	B m	H m	A m	B m	H m	A m	B m	H m	A m	B m	H m
600	11.25	1.4	1.8	1.3	1.6	2.2	1.6	1.0	0.9	0.7	1.1	1.1	0.8	0.8	0.6	0.6	0.9	0.9	0.6
	22.5	1.7	2.5	1.8	2.0	3.1	2.2	1.0	1.2	0.9	1.2	1.5	1.1	0.9	1.0	0.7	1.0	1.2	0.9
	45	2.0	3.4	2.5	2.4	4.3	3.1	1.1	1.7	1.2	1.3	2.1	1.5	0.9	1.3	1.0	1.1	1.7	1.2
	90	2.3	4.6	3.3	2.9	5.8	4.1	1.2	2.3	1.7	1.4	2.9	2.1	0.9	1.8	1.3	1.1	2.3	1.6
700	11.25	1.6	2.0	1.5	1.9	2.5	1.8	1.1	1.0	0.8	1.2	1.3	0.9	0.9	0.6	0.7	1.1	1.0	70
	22.5	1.9	2.8	2.0	2.3	3.5	2.5	1.2	1.4	1.0	1.4	1.8	1.3	1.1	1.1	0.8	1.2	1.4	1.0
	45	2.3	4.0	2.8	2.8	4.9	3.5	1.3	2.0	1.4	1.5	2.5	1.8	1.1	1.6	1.1	1.3	1.9	140
	90	2.7	5.4	3.8	3.3	6.7	4.8	1.3	2.7	1.9	1.7	3.4	2.4	1.0	2.1	1.5	1.3	2.6	1.9
900	11.25	2.1	2.6	1.9	2.4	3.2	2.3	1.4	1.3	1.0	1.6	1.6	1.2	1.2	0.8	0.9	1.4	1.2	0.9
	22.5	2.4	3.6	2.6	2.9	4.5	3.2	1.5	1.8	1.3	1.8	2.3	1.6	1.3	1.4	1.0	1.5	1.8	1.3
	45	2.9	5.0	3.6	3.5	6.3	4.5	1.7	2.5	1.8	2.0	3.2	2.3	1.4	2.0	1.4	1.6	2.5	1.8
	90	3.4	6.8	4.9	4.2	8.5	6.1	1.7	3.4	2.5	2.1	4.3	3.1	1.3	2.7	1.9	1.6	3.3	2.4
1000	11.25	2.3	2.9	2.0	2.6	3.6	2.5	1.6	1.5	1.1	1.7	1.8	1.3	1.3	0.9	1.0	1.5	1.4	1.0
	22.5	2.7	4.0	2.9	3.2	5.0	3.6	1.7	2.0	1.5	2.0	2.5	1.8	1.5	1.6	1.1	1.7	2.0	1.4
	45	3.2	5.6	4.0	3.9	7.0	5.0	1.8	2.8	2.0	2.2	3.5	2.5	1.5	2.2	1.6	1.8	2.7	2.0
	90	3.8	7.6	5.4	4.7	9.5	6.8	1.9	3.8	2.7	2.4	4.8	3.4	150	3.0	2.1	1.8	3.7	2.7

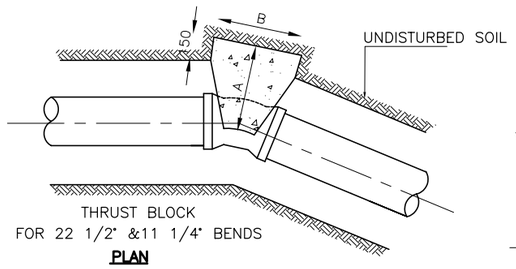

THRUST BLOCK
FOR 22 1/2° &11 1/4° BENDS
PLAN

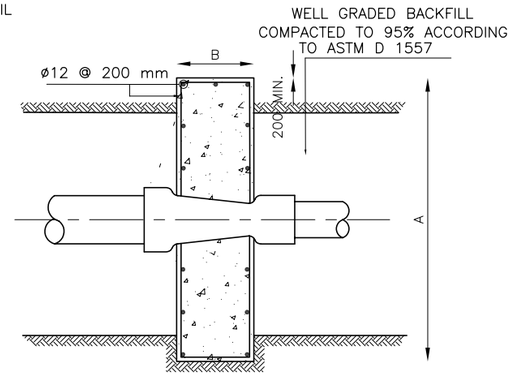

TRUST BLOCK FOR REDUCERS
PLAN

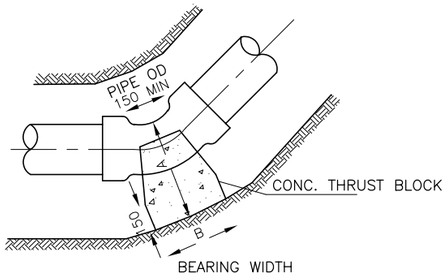

BEARING WIDTH
THRUST BLOCK FOR 45° BEND
PLAN

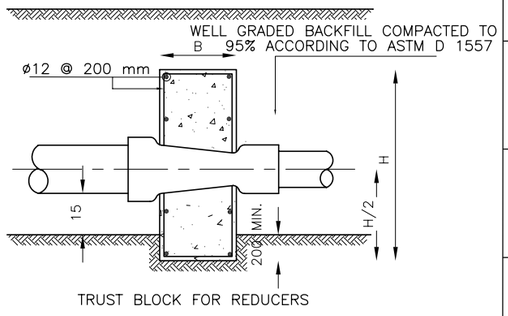

TRUST BLOCK FOR REDUCERS
SECTION

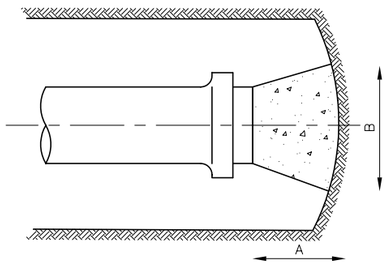

THRUST BLOCK FOR END CAP
PLAN

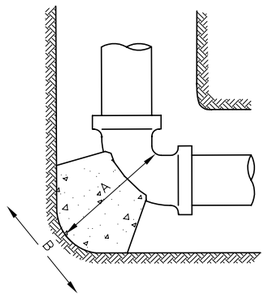

THRUST BLOCKS FOR 90° BEND
PLAN

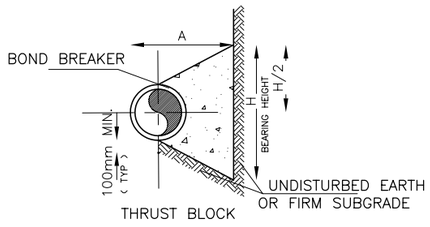

THRUST BLOCK
SECTION

BEARING AREA = BH

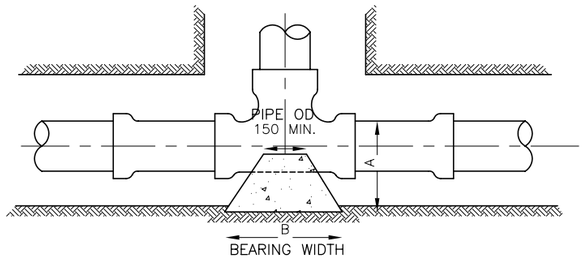

THRUST BLOCKS FOR TEE
PLAN

REDUCED SIZE DRAWINGS

REV.	DATE	DRAWN	CHKD	REMARKS

DESIGNED:	CHECKED:	SCALE:
A.H.	M.M.	AS SHOWN
DRAWN:	APPROVED:	DATE:
N.K.	D.D.	NOV. 2005

CDM International Inc.

NORTHERN GOVERNORATES WATER TRANSMISSION
Eastern Primary Transmission System

TRUST BLOCK DETAILS

PROJECT NO. : 3029-42324

DRAWING NO. : PD-4

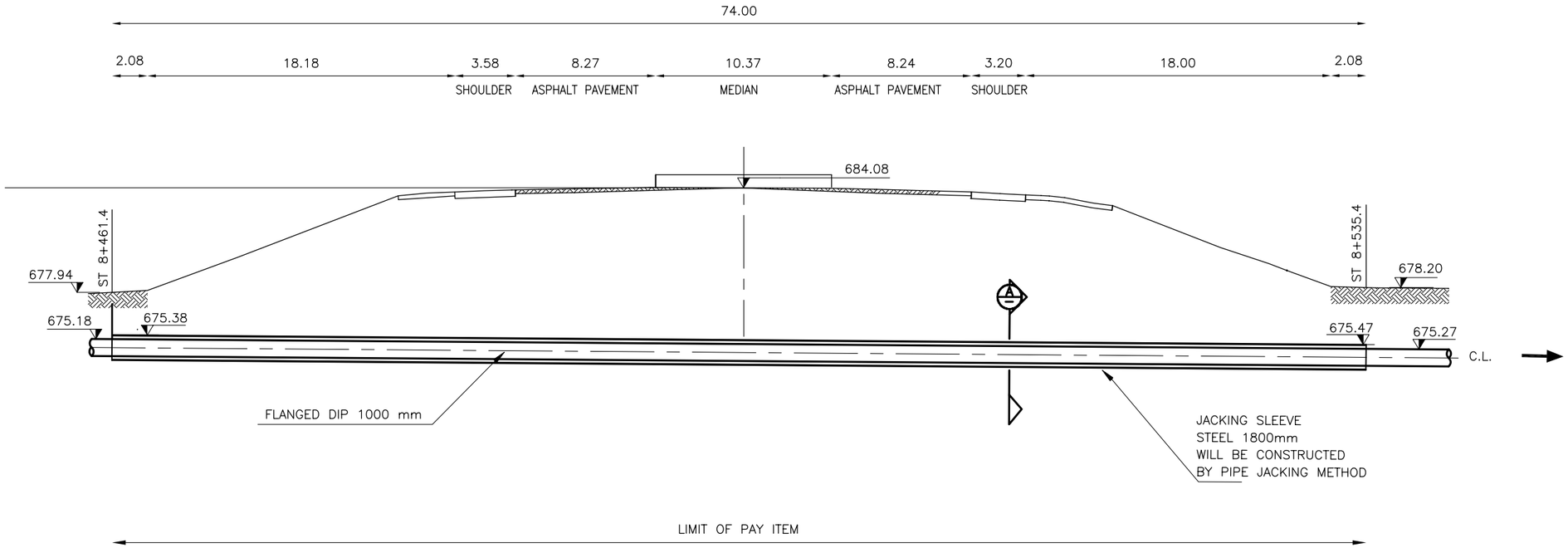

HIGHWAY CROSSING 1000mm
JACKING LONGITUDINAL SECTION

1:150

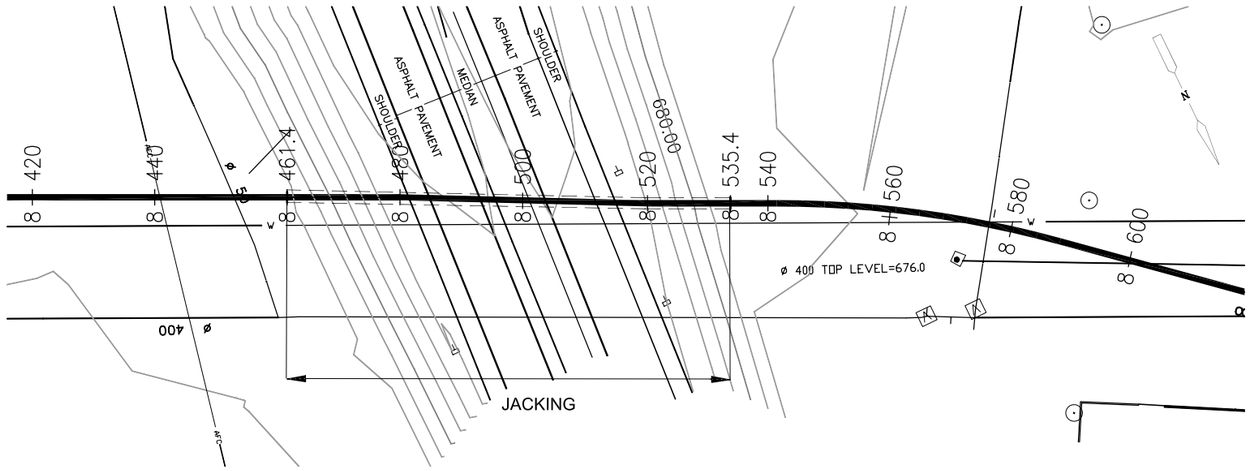

AMMAN–SYRIA HIGHWAY (JABER) ROAD CROSSING PLAN

1:500

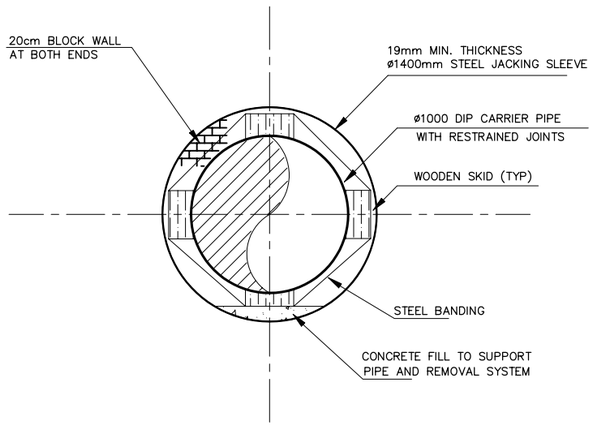

JACKING CROSS SECTION DETAIL A

1:20

REDUCED SIZE DRAWINGS

REV.	DATE	DRAWN	CHKD	REMARKS

DESIGNED:	CHECKED:	SCALE:
C.P.	M.M.	AS SHOWN
DRAWN:	APPROVED:	DATE:
N.K.	D.D.	NOV. 2005

CDM
CDM International Inc.

NORTHERN GOVERNORATES WATER TRANSMISSION
Eastern Primary Transmission System

AMMAN-SYRIAN BORDER HIGHWAY (JABER) CROSSING DETAIL

PROJECT NO. : 3029-42324

DRAWING NO. : **PD-5**

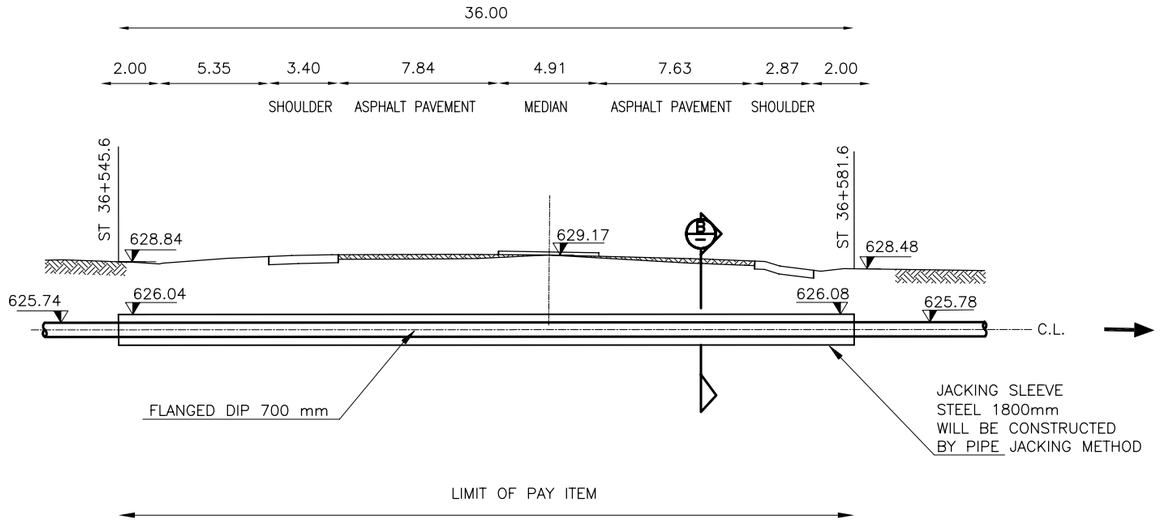

HIGHWAY CROSSING 700mm
JACKING LONGITUDINAL SECTION

1:150

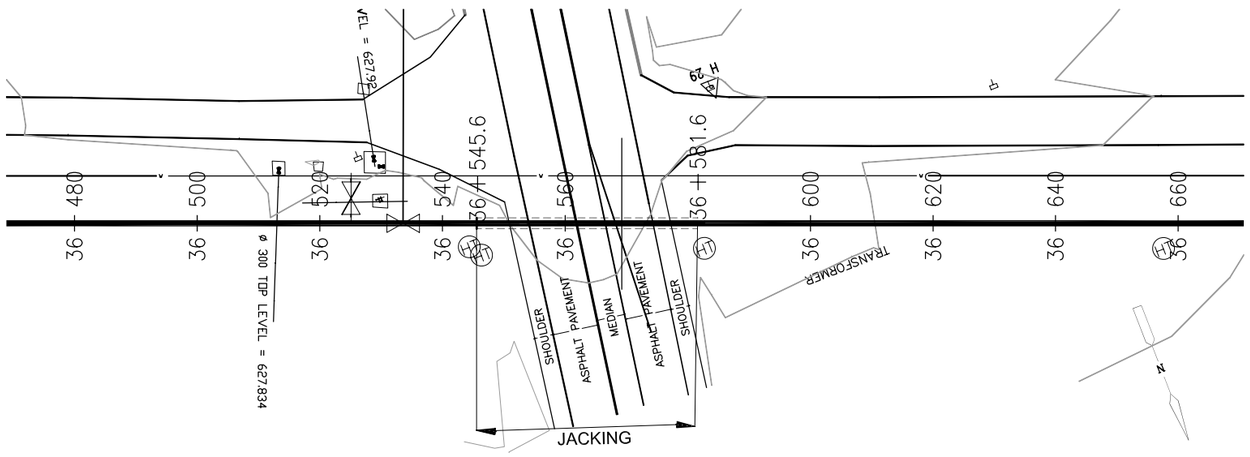

AMMAN–SYRIA HIGHWAY (DERA'A) ROAD CROSSING PLAN

1:500

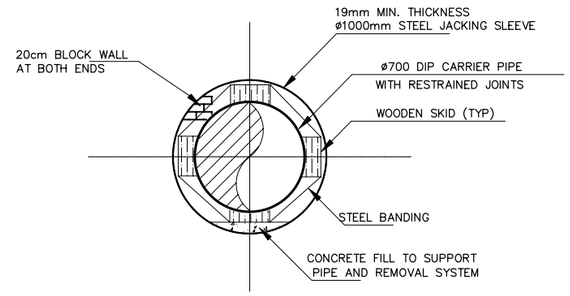

JACKING CROSS SECTION DETAIL B

1:20

REDUCED SIZE DRAWINGS

REV.	DATE	DRAWN	CHKD	REMARKS

DESIGNED:	CHECKED:	SCALE:
C.P.	M.M.	AS SHOWN
DRAWN:	APPROVED:	DATE:
N.K.	D.D.	NOV. 2005

CDM
CDM International Inc.

NORTHERN GOVERNORATES WATER TRANSMISSION
Eastern Primary Transmission System

AMMAN-SYRIAN BORDER HIGHWAY (DERA'A) CROSSING DETAIL

PROJECT NO. : 3029-42324

DRAWING NO. : **PD-6**

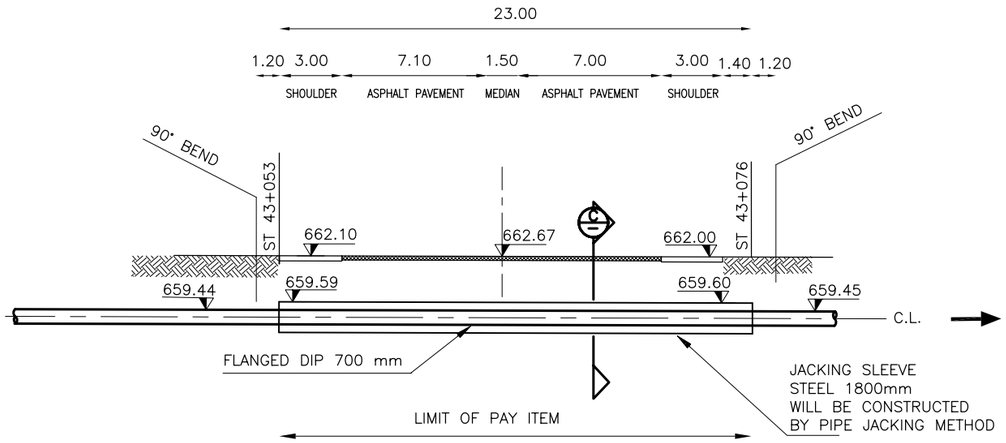

HIGHWAY CROSSING 700mm
JACKING LONGITUDINAL SECTION

1:150

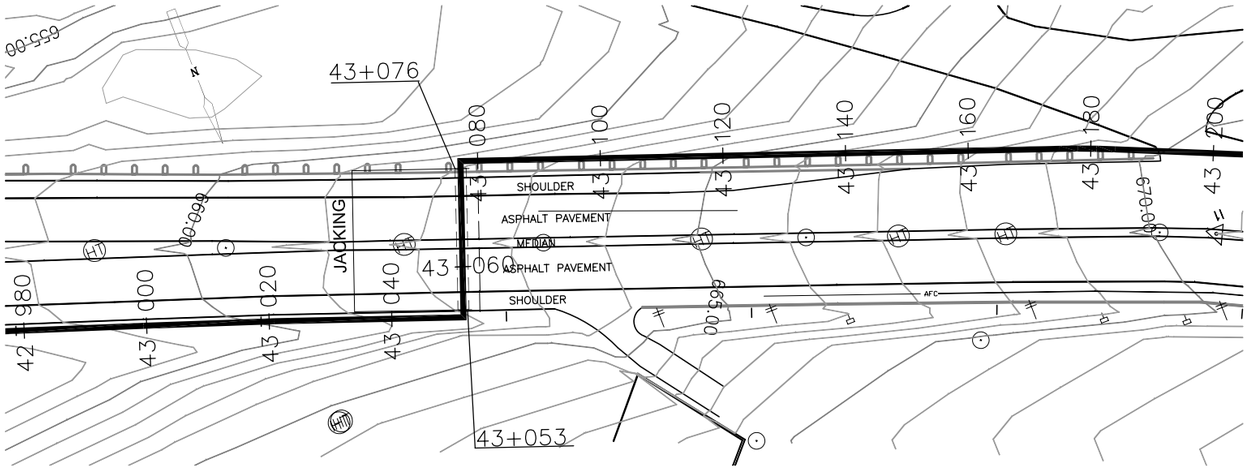

AMMAN–IRBID HIGHWAY ROAD CROSSING PLAN

1:500

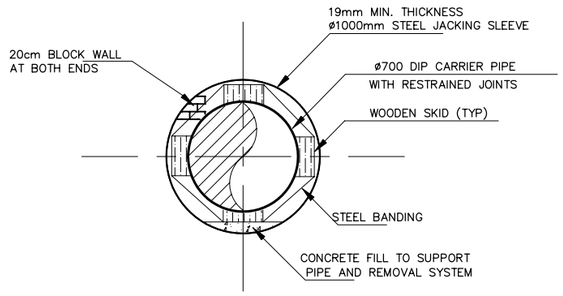

JACKING CROSS SECTION DETAIL C

1:20

REDUCED SIZE DRAWINGS

REV.	DATE	DRAWN	CHKD	REMARKS

DESIGNED:	CHECKED:	SCALE:
C.P.	M.M.	AS SHOWN
DRAWN:	APPROVED:	DATE:
N.K.	D.D.	NOV. 2005

CDM
CDM International Inc.

NORTHERN GOVERNORATES WATER TRANSMISSION
Eastern Primary Transmission System

AMMAN-IRBID HIGHWAY CROSSING DETAIL

PROJECT NO. : 3029-42324

DRAWING NO. : **PD-7**