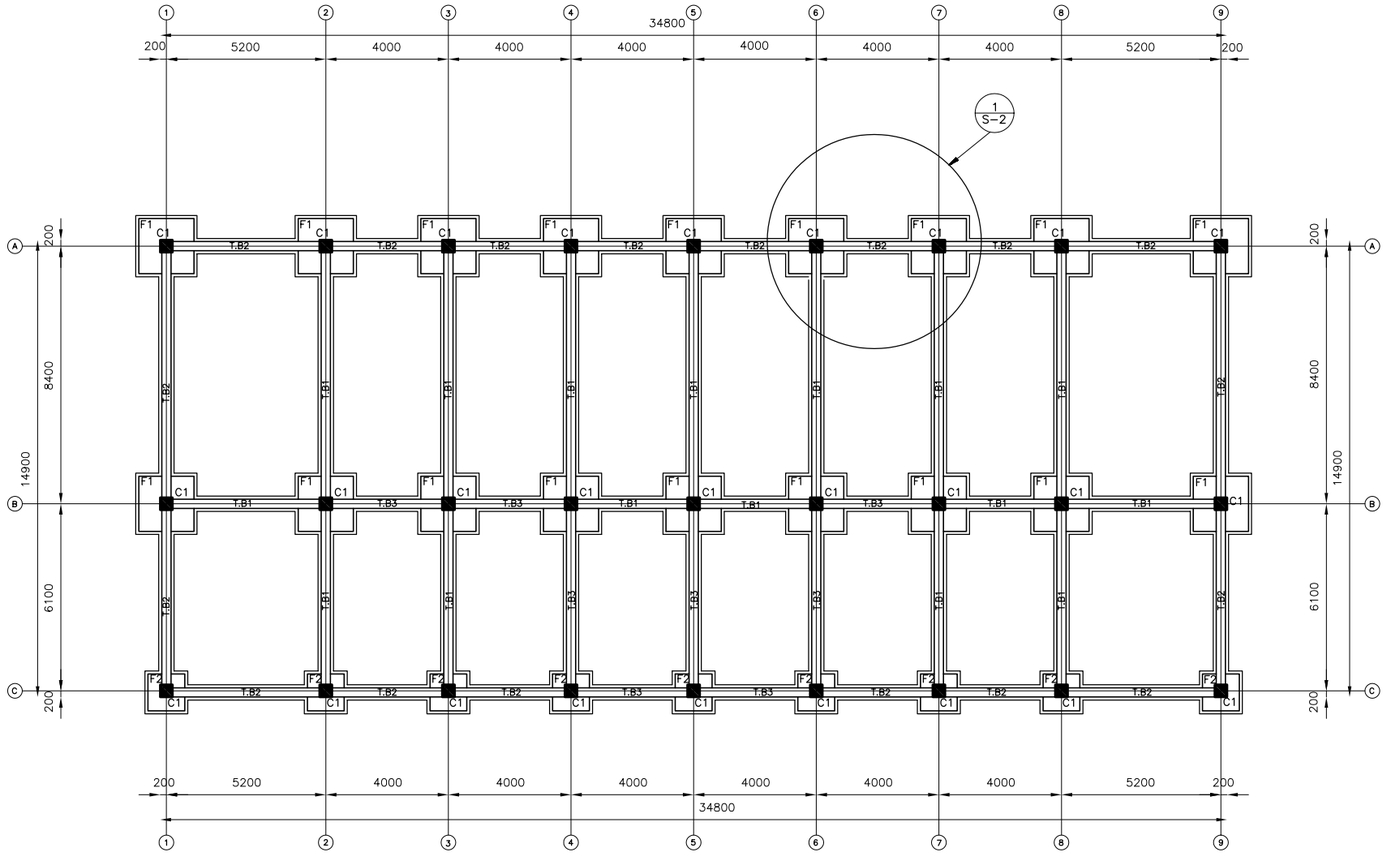

PUMP BUILDING FOUNDATIONS PLAN

1:100

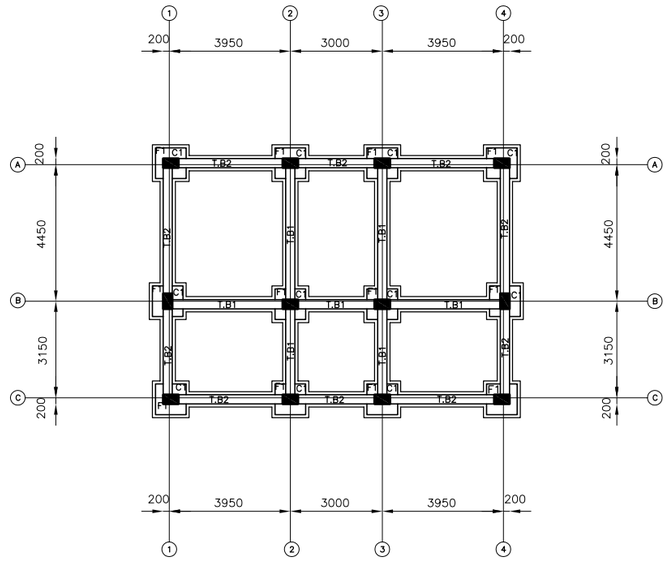

CONTROL BUILDING FOUNDATIONS PLAN

1:100

REDUCED SIZE DRAWINGS

METER

2 1 0 4

REV.	DATE	DRAWN	CHKD	REMARKS

DESIGNED:	CHECKED:	SCALE:
S.N.	A.O.	AS SHOWN
DRAWN:	APPROVED:	DATE:
S.N.	M.A.	NOV. 2005

CDM International Inc.

NORTHERN GOVERNORATES WATER TRANSMISSION
Eastern Primary Transmission System

PUMP AND CONTROL BUILDINGS FOUNDATION PLANS

PROJECT NO. : 3029-42324

DRAWING NO. : **S-1**

CONTROL BUILDING FOOTINGS SCHEDULE

FOOTING	DIMENSIONS (mm)			REINFORCEMENT	
	A	B	DEPTH	(LONG DIRECTION)	(SHORT DIRECTION)
F1	1000	1000	400	Y14@200(B)	Y14@200(B)

PUMP BUILDING FOOTINGS SCHEDULE

FOOTING	DIMENSIONS (mm)			REINFORCEMENT	
	A	B	DEPTH	(LONG DIRECTION)	(SHORT DIRECTION)
F1	1800	1800	400	Y14@200(B)	Y14@200(B)
F2	1200	1200	350	Y14@200(B)	Y14@200(B)

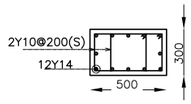

C1 DETAILS
1:20

CONTROL BUILDING COLUMNS

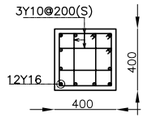

C1 DETAILS
1:20

PUMP STATION COLUMNS

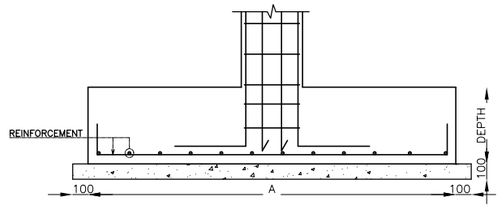

SECTION C–C
1:20

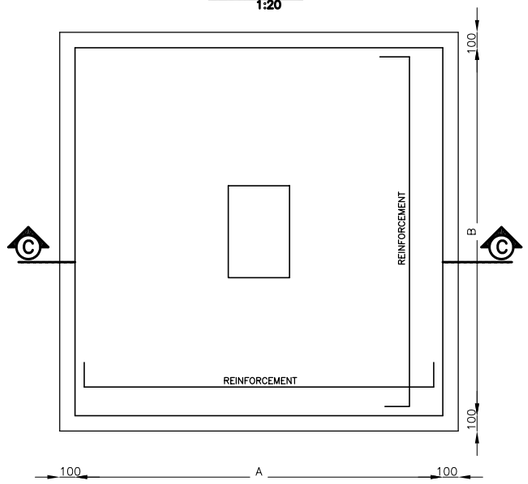

FOOTING REINFORCEMENT PLAN
1:20

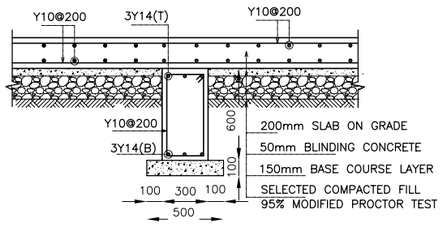

TYPICAL SECTION THROUGH TB1
1:20

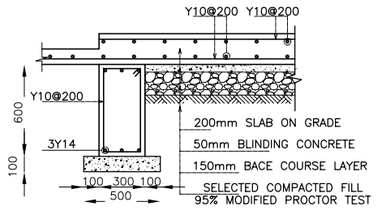

TYPICAL SECTION THROUGH TB2
1:20

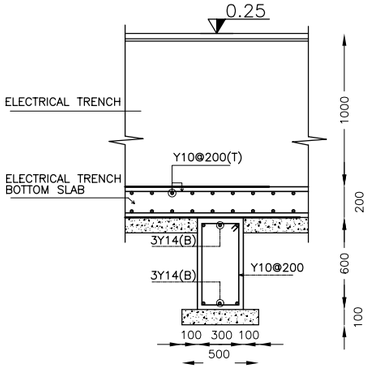

TYPICAL SECTION THROUGH TB3
1:20

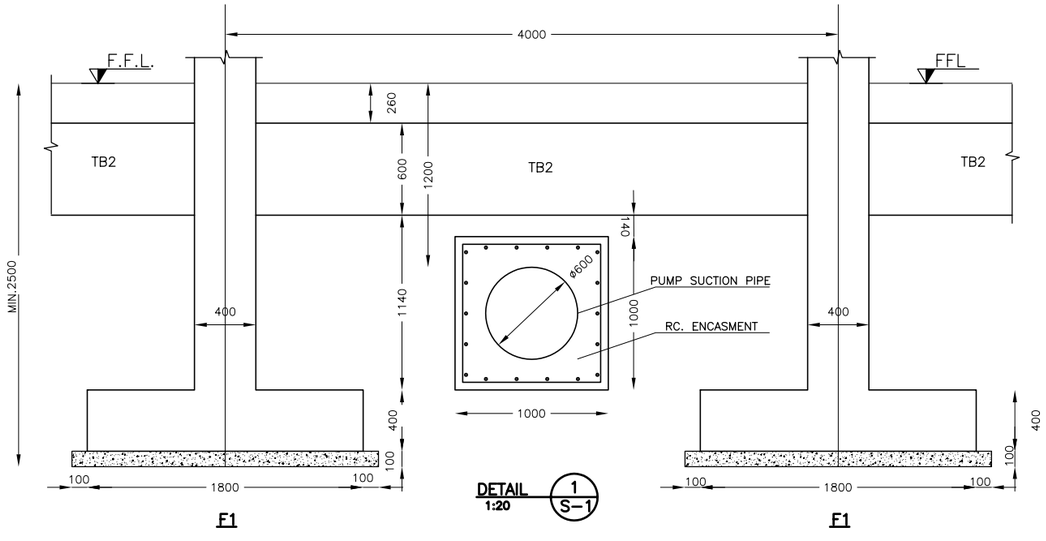

DETAIL 1/S–1
1:20

F1

F1

REDUCED SIZE DRAWINGS

REV.	DATE	DRAWN	CHKD	REMARKS

DESIGNED:	CHECKED:	SCALE:
S.N.	A.O.	AS SHOWN
DRAWN:	APPROVED:	DATE:
S.N.	M.A.	NOV. 2005

CDM
CDM International Inc.

NORTHERN GOVERNORATES WATER TRANSMISSION
Eastern Primary Transmission System

PUMP AND CONTROL BUILDINGS
FOUNDATIONS DETAILS

PROJECT NO. : 3029-42324

DRAWING NO. : S-2

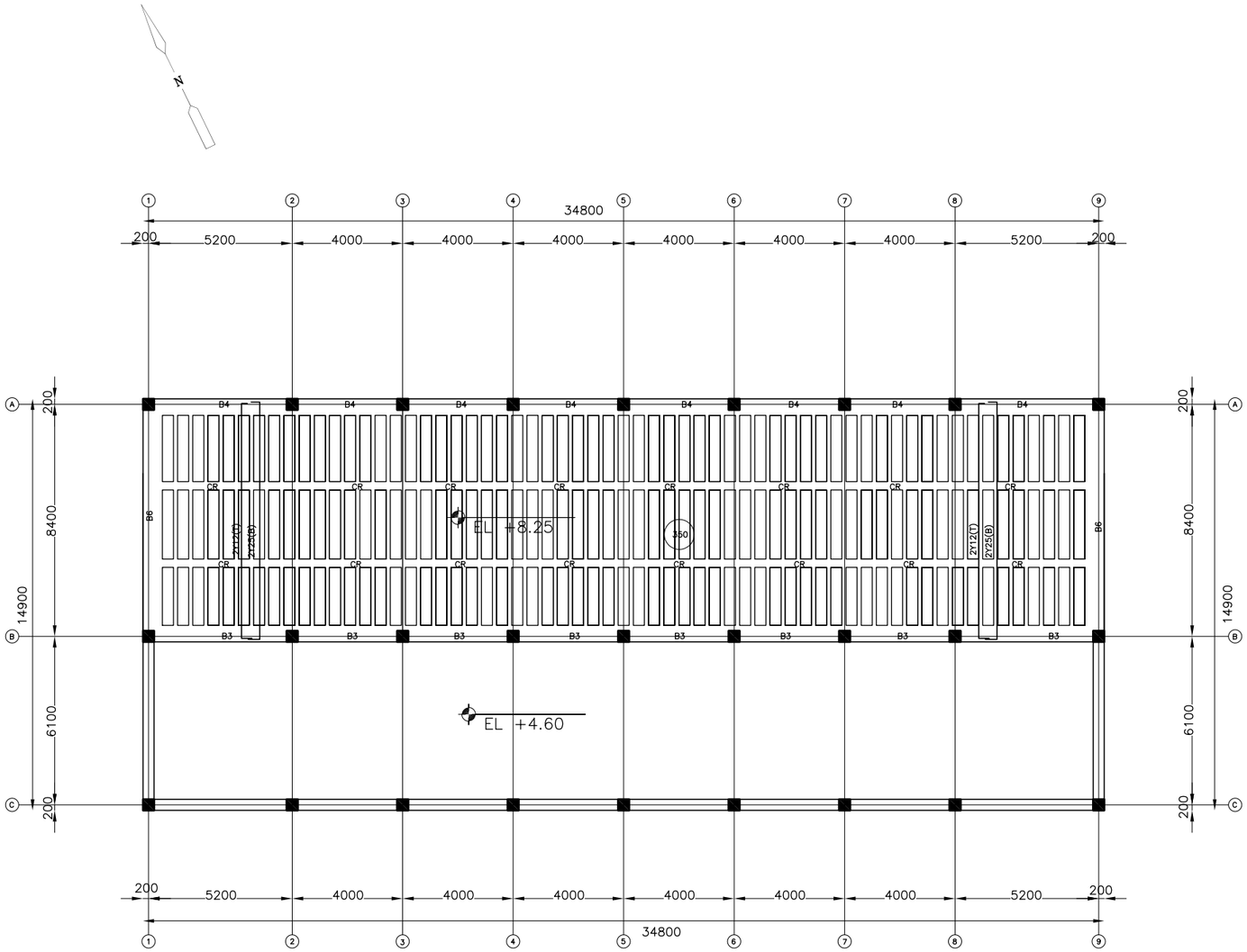

PUMP BUILDING ROOF FRAMING PLAN–1

1:100

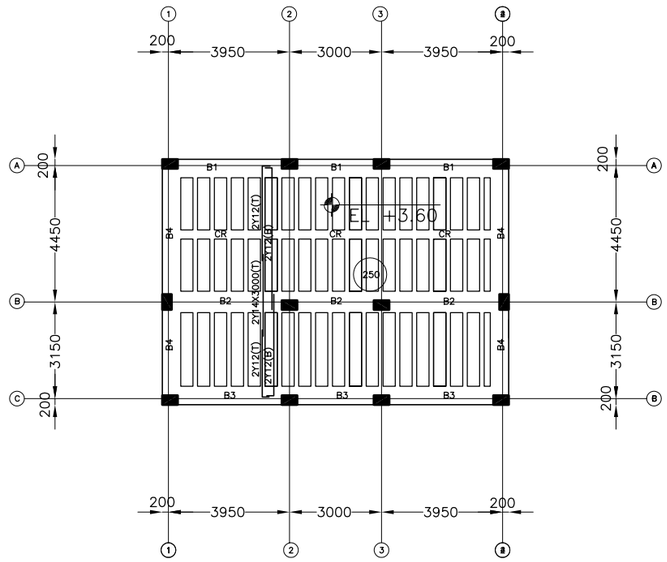

CONTROL BUILDING ROOF FRAMING PLAN

1:100

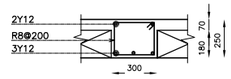

TYPICAL SECTION THROUGH 250 CR

1:20

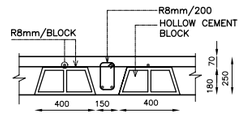

TYPICAL SECTION THROUGH 25cm RIBBED–SLAB

1:20

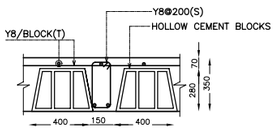

TYPICAL SECTION THROUGH 35cm RIBBED SLAB

1:20

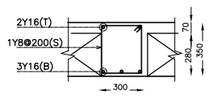

TYPICAL SECTION THROUGH CR

1:20

REDUCED SIZE DRAWINGS

REV.	DATE	DRAWN	CHKD	REMARKS

DESIGNED:	CHECKED:	SCALE:
S.N.	A.O.	AS SHOWN
DRAWN:	APPROVED:	DATE:
S.N.	M.A.	NOV. 2005

CDM International Inc.

NORTHERN GOVERNORATES WATER TRANSMISSION
Eastern Primary Transmission System

PUMP AND CONTROL BUILDINGS ROOF PLAN-1

PROJECT NO. : 3029-42324

DRAWING NO. : **S-3**

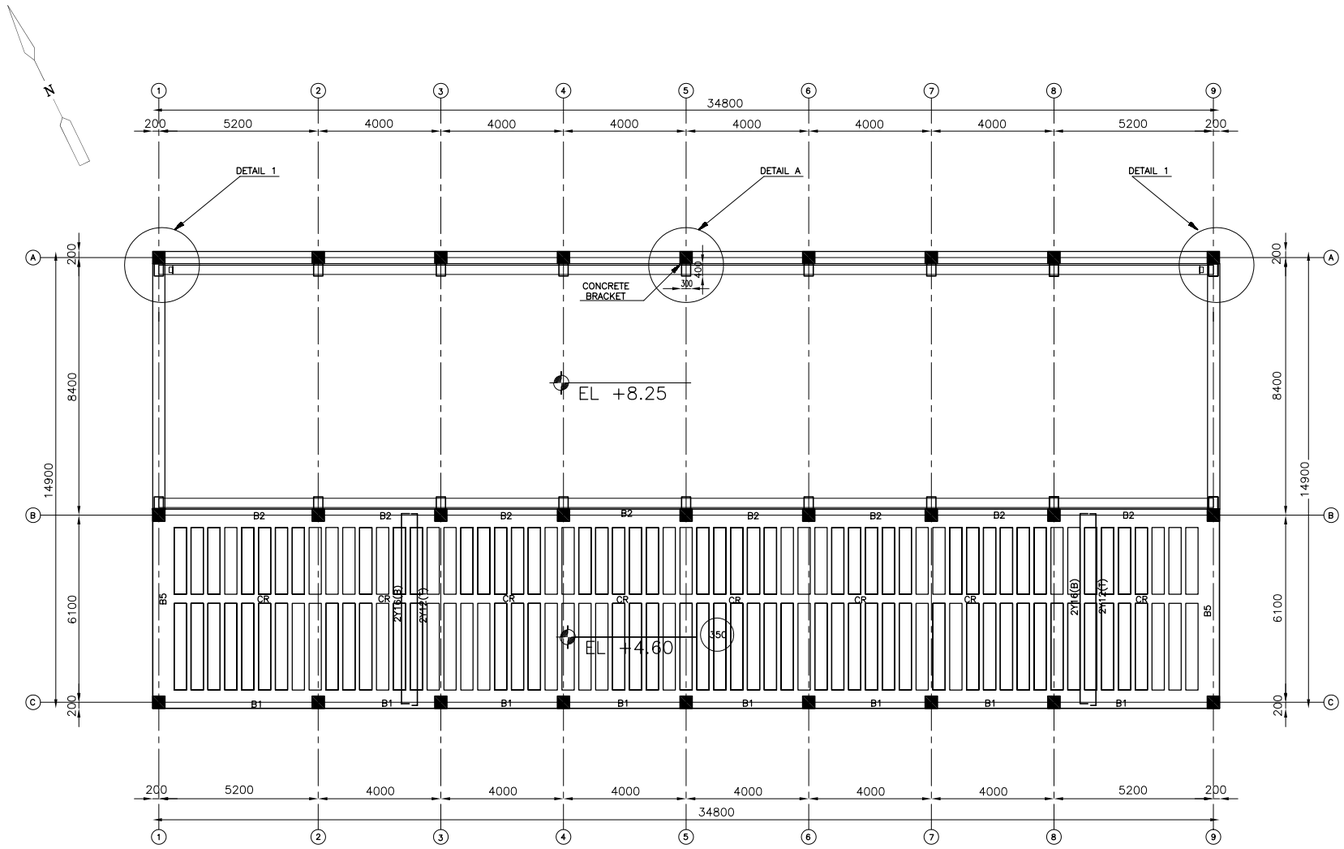

PUMP BUILDING ROOF FRAMING PLAN–2
1:100

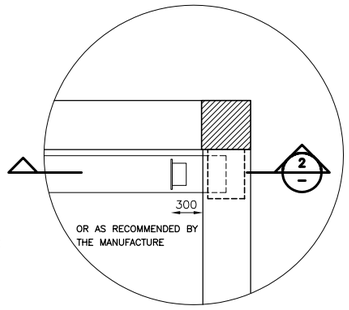

DETAIL 1
NTS

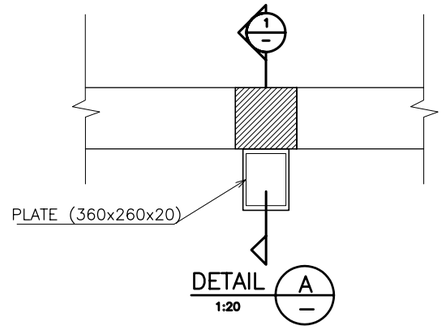

DETAIL A
1:20

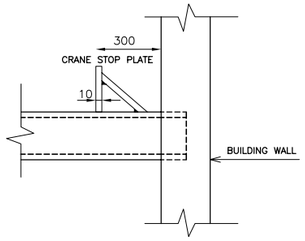

SECTION 2
NTS

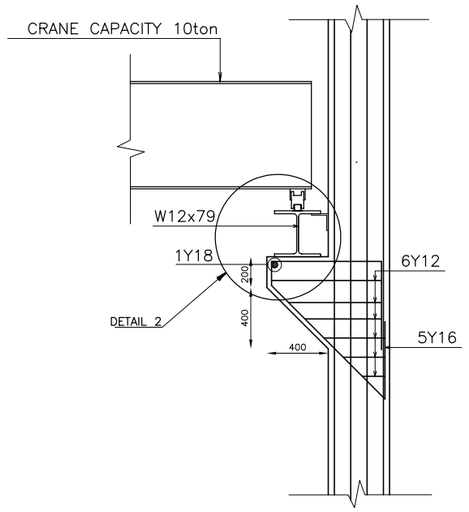

SECTION 1
1:20

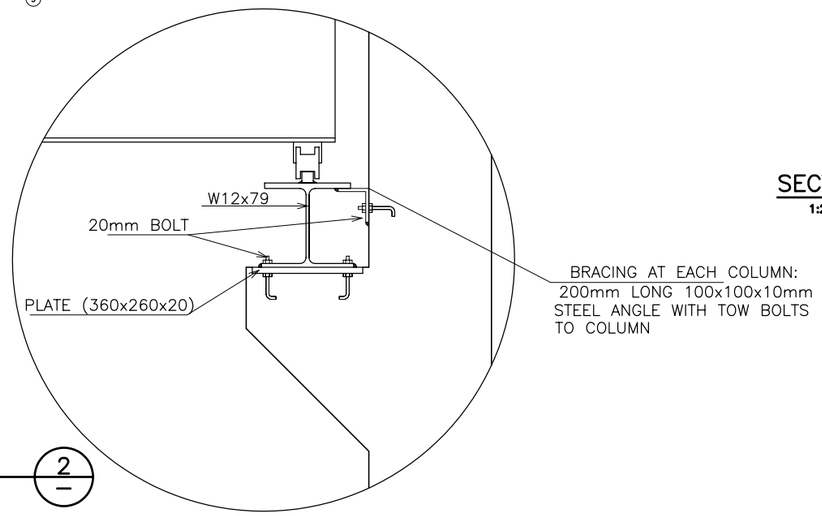

DETAIL 2
1:10

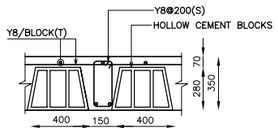

TYPICAL SECTION THROUGH 35cm RIBBED SLAB
1:20

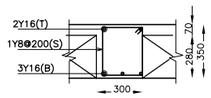

TYPICAL SECTION THROUGH CR
1:20

REDUCED SIZE DRAWINGS

REV.	DATE	DRAWN	CHKD	REMARKS

DESIGNED:	CHECKED:	SCALE:
S.N.	A.O.	AS SHOWN
DRAWN:	APPROVED:	DATE:
S.N.	M.A.	NOV. 2005

CDM
CDM International Inc.

NORTHERN GOVERNORATES WATER TRANSMISSION
Eastern Primary Transmission System

PUMP BUILDING ROOF PLAN-2

PROJECT NO. : 3029-42324

DRAWING NO. : S-4

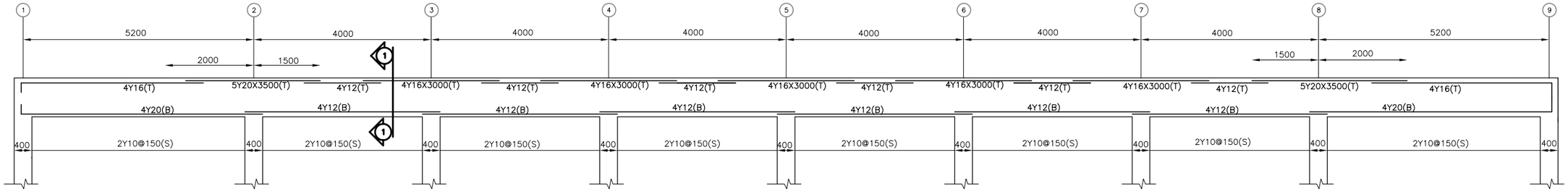

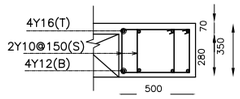

SECTION(1–1)
1:20

LONGITUDINAL SECTION THROUGH B1
V. 1:20
H. 1:50

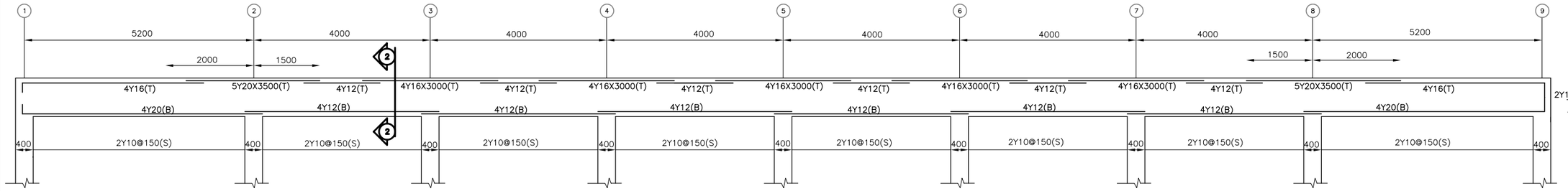

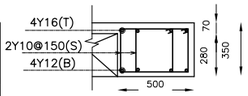

SECTION(2–2)
1:20

LONGITUDINAL SECTION THROUGH B2
V. 1:20
H. 1:50

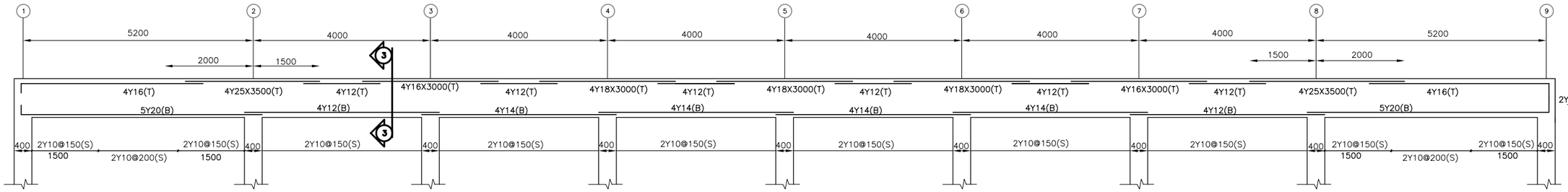

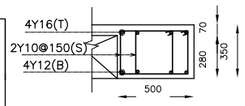

SECTION(3–3)
1:20

LONGITUDINAL SECTION THROUGH B3
V. 1:20
H. 1:50

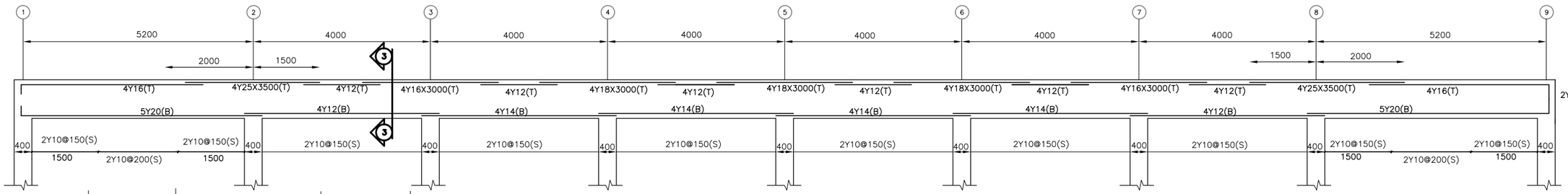

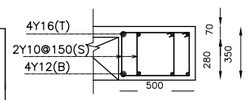

SECTION(4–4)
1:20

LONGITUDINAL SECTION THROUGH B4
V. 1:20
H. 1:50

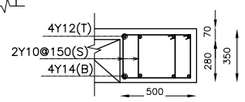

TYPICAL SECTION THROUGH B5
1:20

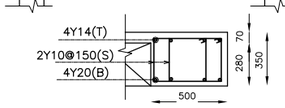

TYPICAL SECTION THROUGH B6
1:20

REDUCED SIZE DRAWINGS

REV.	DATE	DRAWN	CHKD	REMARKS

DESIGNED:	CHECKED:	SCALE:
S.N.	A.O.	AS SHOWN
DRAWN:	APPROVED:	DATE:
S.N.	M.A.	NOV. 2005

CDM
CDM International Inc.

NORTHERN GOVERNORATES WATER TRANSMISSION
Eastern Primary Transmission System

PUMP BUILDING BEAMS DETAILS

PROJECT NO. : 3029-42324

DRAWING NO. : S-5

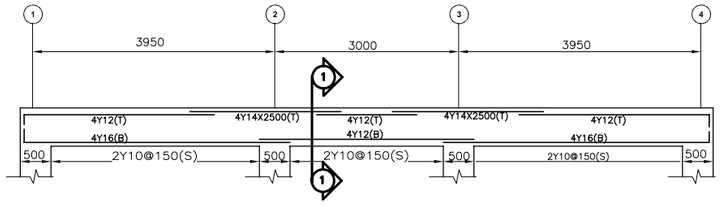

LONGITUDINAL SECTION THROUGH B1
V. 1:20
H. 1:50

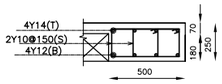

SECTION (1–1)
1:20

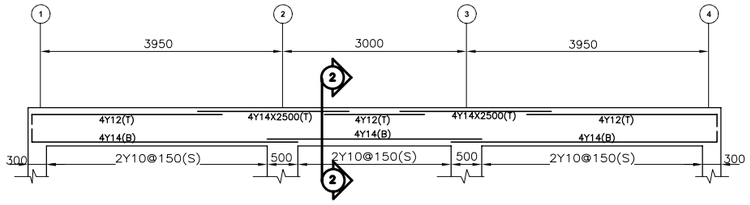

LONGITUDINAL SECTION THROUGH B2
V. 1:20
H. 1:50

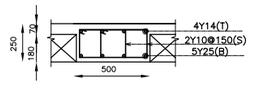

SECTION (2–2)
1:20

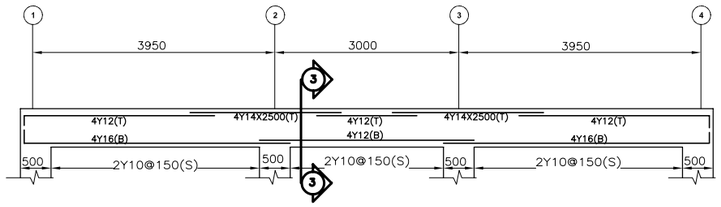

LONGITUDINAL SECTION THROUGH B3
V. 1:20
H. 1:50

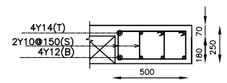

SECTION (3–3)
1:20

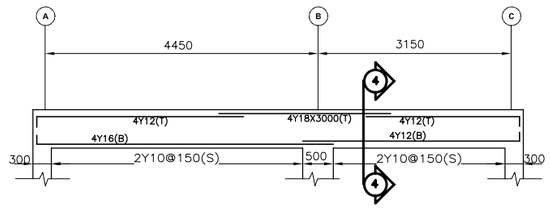

LONGITUDINAL SECTION THROUGH B4
V. 1:20
H. 1:50

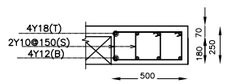

SECTION (4–4)
1:20

REDUCED SIZE DRAWINGS

REV.	DATE	DRAWN	CHKD	REMARKS

DESIGNED:	CHECKED:	SCALE:
S.N.	A.O.	AS SHOWN
DRAWN:	APPROVED:	DATE:
S.N.	M.A.	NOV. 2005

CDM International Inc.

NORTHERN GOVERNORATES WATER TRANSMISSION
Eastern Primary Transmission System

CONTROL BUILDING BEAMS DETAILS

PROJECT NO. : 3029-42324

DRAWING NO. : **S-6**

NOTE:
ISOLATION JOINTS SHALL BE PROVIDED FOR ALL VAULTS CONTACT LINES WITH WALKWAYS.

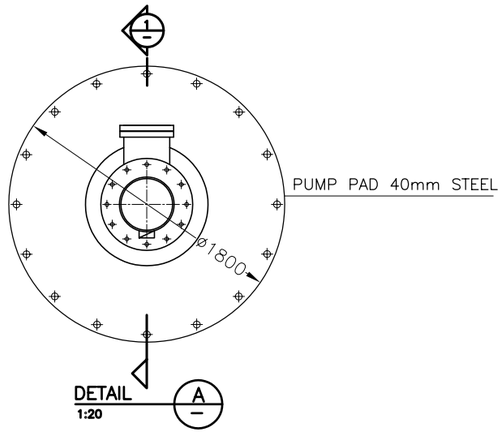

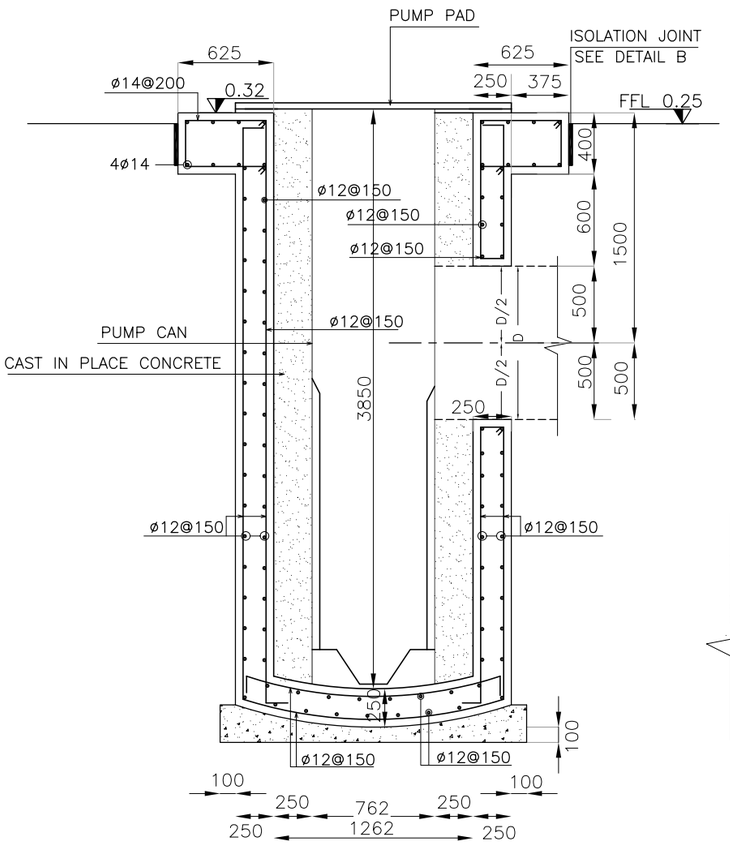

SECTION 1
1:20

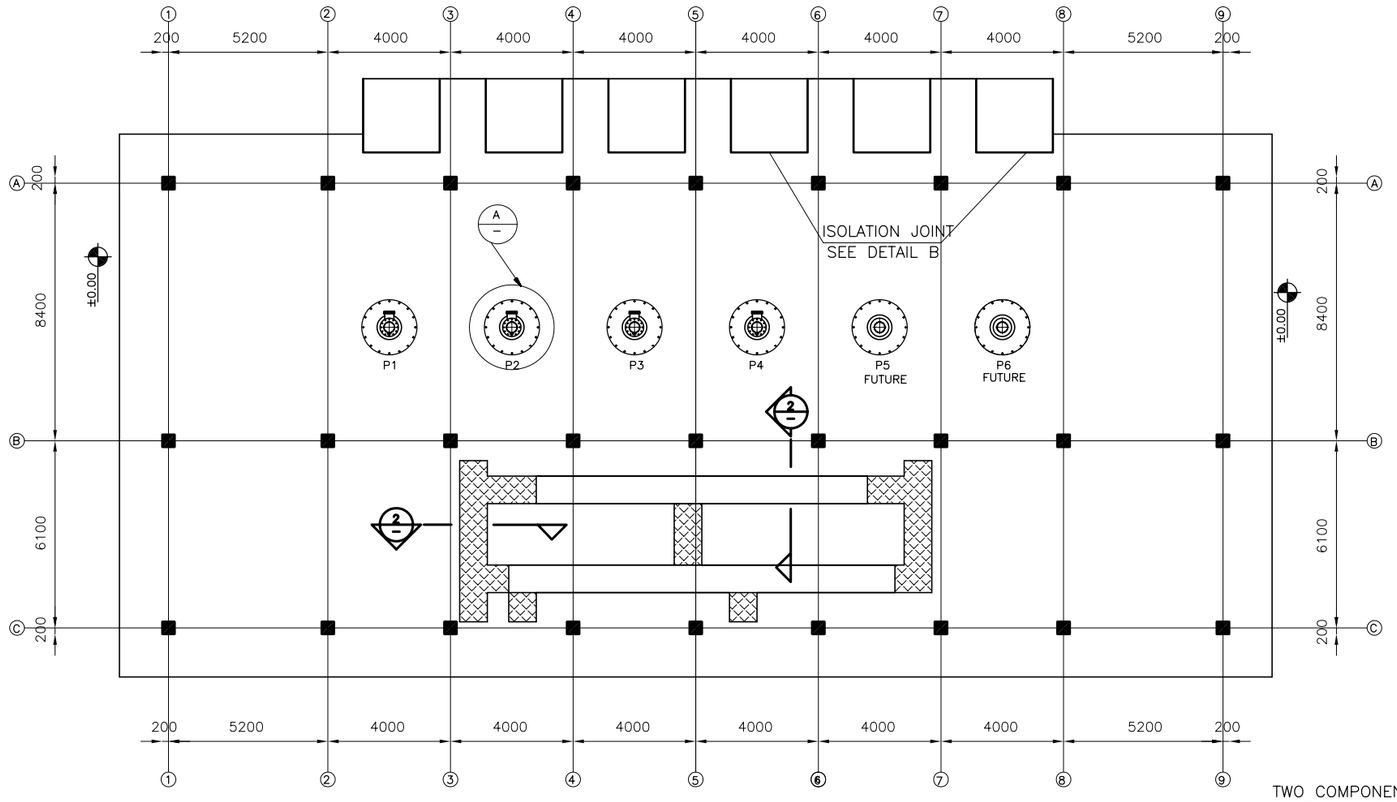

SLAB ON GRADE LAYOUT
1:100

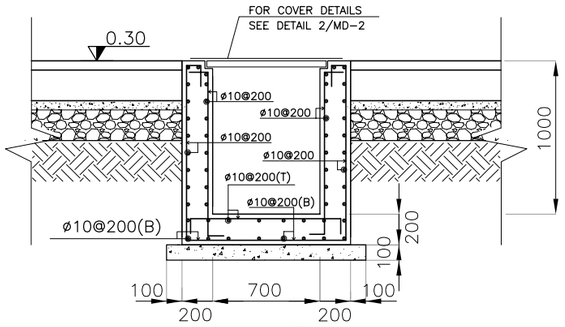

SECTION 2
1:20

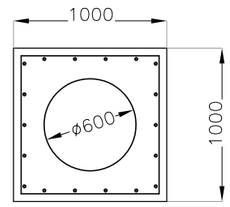

TYPICAL SECTION THROUGH SUCTION PIPE ENCASMENT
1:20

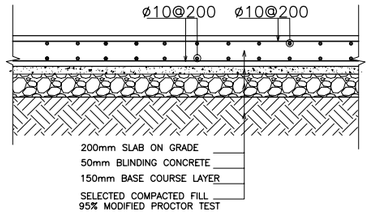

TYPICAL SECTION THROUGH SLAB ON GRADE
1:20

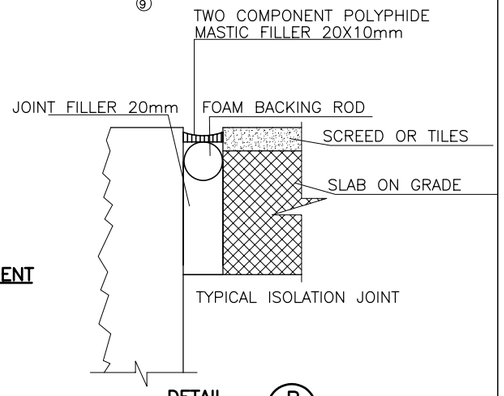

DETAIL B
NTS

REDUCED SIZE DRAWINGS

REV.	DATE	DRAWN	CHKD	REMARKS

DESIGNED:	CHECKED:	SCALE:
S.N.	A.O.	AS SHOWN
DRAWN:	APPROVED:	DATE:
S.N.	M.A.	NOV. 2005

CDM International Inc.

NORTHERN GOVERNORATES WATER TRANSMISSION
Eastern Primary Transmission System

PUMP BUILDING SLAB GRADE LAYOUT

PROJECT NO. : 3029-42324

DRAWING NO. : S-7